GUIDANCE NOTES ON

ERGONOMIC DESIGN OF NAVIGATION BRIDGES

OCTOBER 2003

American Bureau of Shipping
Incorporated by Act of Legislature of
the State of New York 1862

Copyright © 2003
American Bureau of Shipping
ABS Plaza
16855 Northchase Drive
Houston, TX 77060 USA

This Page Intentionally Left Blank

Foreword

The focus of ergonomics is the study of the role of humans in the safe and efficient operation of complex industrial systems and the application of ergonomic principles and data to the design of equipment and systems. The importance of the "human element" and ergonomics in maritime safety is increasingly recognized and embraced by the maritime community (O'Neil, 2001). These *Guidance Notes for the Ergonomic Design of Navigation Bridges* inform vessel designers of the ergonomic principles and data appropriate to the design of navigation bridges; and in doing so serve to supplement and support the ABS *Guide for Bridge Design and Navigational Equipment/Systems.*

These Guidance Notes are consistent with the principal international statutory and discretionary guidance addressing the design of bridge systems, including: International Association of Classification Societies *Standard for Bridge Design, Equipment, and Arrangement*; International Safety of Life at Sea Convention (SOLAS), as amended, and; the International Maritime Organization's *Guidelines on Ergonomic Criteria for Bridge Equipment and Layout*. The guidance contained in this document is deemed generally appropriate to seagoing vessels of various types and categories, such as container vessels, oil carriers, bulk carriers, workboats, ferries, surface type utility vessels passenger vessels and so on. This being the case, this document provides:

i) *General ergonomic design guidance* (design principles) for navigation bridges (Section 2),

ii) *Specific bridge design guidance* gleaned from international sources, such as the International Maritime Organization (IMO) and the International Association of Classification Societies (IACS) (see Sections 3 through 11),

iii) A *process* to identify individual vessel bridge requirements to guide application of ergonomic design principles (see Appendix 1).

These Guidance Notes do not provide more generally applicable detailed ergonomic design guidance or data, such as control dimensions, environmental limits or human anthropometry. Those data can be found in the ABS *Guidance Notes on the Application of Ergonomics to Marine Systems*. Detailed environmental control guidance is available in the ABS *Guide for Crew Habitability on Ships* and the ABS *Guide for Crew Habitability on Offshore Installations*.

These Guidance Notes do not restate all of the bridge-related requirements of international agreements and statutes. Designers must use those source documents to create and define a base bridge requirements matrix for any particular bridge design effort. This document can be used to support the identification or refinement of requirements based on: ergonomic analysis techniques; the application of guiding principles of ergonomic design as related to bridges; and the application of detailed guidance contained in these Guidance Notes.

This Page Intentionally Left Blank

GUIDANCE NOTES ON

ERGONOMIC DESIGN OF NAVIGATION BRIDGES

CONTENTS

SECTION 1 Introduction 1

1 Background 1

2 Application 1

3 Scope 1

SECTION 2 General Guidance (Principles of Ergonomic Design) 3

1 Background 3

2 Terminology 3

3 General Guidance 4

3.1 Principle 1: Define the Roles and Responsibilities of Bridge Personnel 4

3.2 Principle 2: Design for Human Capabilities, Limitations and Expectations 5

3.3 Principle 3: Arrange Bridge Devices, Controls and Displays to Maximize Access 7

3.4 Principle 4: Design Displays Consistent with Task Requirements 8

3.5 Principle 5: Design Simple, Direct and Easy to Use Inputs and Controls 10

3.6 Principle 6: Design for Productive Performance and to Reduce Human Error 11

3.7 Principle 7: Provide Job Aids and Training 12

3.8 Principle 8: Perform Testing 13

SECTION 3 Bridge Functionality 15

1 Background 15

2 Terminology 15

3 General Guidance 15

3.1 Bridge Functions 15

3.2 Growth of Bridge Functionality 16

3.3 Ancillary Bridge Functions 16

TABLE 1 Sample Bridge Functions and Responsibilities 17

SECTION 4 Bridge Arrangement and Layout 19

1 Background 19
2 Terminology 19
3 Internal Visibility 20
3.1 Height of Lower Edge of Front Windows 20
3.2 Height of Upper Edge of Front Windows 20
3.3 Window Framing 20
3.4 Window Inclination 21
3.5 Clear View 21
3.6 Visibility from Bridge Window 22
4 External Visibility 22
4.1 View of Sea Surface 22
4.2 Field of View Around Vessel 22
4.3 Navigating and Maneuvering Workstation Field of View 23
4.4 Bridge Wing Field of View 24
4.5 Main Steering Position Field of View 24
4.6 Blind Sectors 25
4.7 View of the Vessel's Side 25
5 Overall Arrangement 25
5.1 Vessel Control 25
5.2 Navigating and Maneuvering Workstations 26
5.3 Manual Steering Workstation 26
5.4 Monitoring Workstation 26
5.5 Main Stations Communication 26
5.6 Bridge Wing Communication 26
6 Traffic 27
6.1 Clear Route Across the Wheelhouse 27
6.2 Obstructions at the Point of Entry 27
6.3 Adjacent Workstations 27
6.4 Passageway Distance 27
6.5 Doors 27
6.6 Bridge Ceiling Clearance Height 27
6.7 Main Workstations 27
7 Sound Signals 28
7.1 Audibility of Sound Signals Inside the Bridge 28
7.2 External Sound Signals 28

FIGURE 1 Example of Height of Upper Edge of Front Window in Relation to Eye Height 21
FIGURE 2 View of Sea Surface 22
FIGURE 3 Field of View Around Vessel 23
FIGURE 4 Navigating, Maneuvering and Monitoring Workstations and Conning Position Field of View 23
FIGURE 5 Bridge Wing Field of View 24
FIGURE 6 Main Steering Position Field of View 24
FIGURE 7 Typical Bridge Arrangement 25

SECTION 5 Console and Workspace Design 29

1 Background 29

2 Terminology 29

3 Configuration 29

3.1 Workstation Area Configuration 29

3.2 Single Watchstander Console 29

3.3 Design of Consoles for both Seated and Standing Operation 29

3.4 Console Left-to-Right Viewing Angle 30

3.5 Console Height 30

3.6 Console Leg Room 30

3.7 Chart Table Dimensions 31

3.8 Chair Design 31

4 Location of Instruments and Equipment 32

4.1 Location Above Front Window 32

4.2 Instruments and Equipment at Navigating and Maneuvering Workstations 32

4.3 Other Instrument and Equipment Locations 33

4.4 Mounting 34

4.5 Portable Items 34

5 Communication Devices 34

5.1 Internal and External Communications 34

5.2 Additional Communications Equipment 35

5.3 Radiotelephone Public Correspondence 35

5.4 Written Communications Reception 35

FIGURE 1 Console Configuration and Dimensions for Standing Positions 30

FIGURE 2 Console Configuration and Dimensions for Sitting Positions 31

SECTION 6 Detailed Design 37

1 Background 37

2 Terminology 37

3 Display Arrangement 37

3.1 Immediate Field of View 37

3.2 Preferred Viewing Area 37

4 Information Display 38

4.1 Lack of Ambiguity 38

4.2 Digital Displays 38

4.3 Update of Information 38

4.4 Information Duration 39

4.5 Display Simplicity 39

4.6 Tailoring the Display to Bridge Personnel Needs 39

4.7 Display Fields for the Display of Important Information 39

4.8 Graphic Display Enhancement 39

4.9 Indication of Scale 39
4.10 Aiding Distance Judgments 39
4.11 Multifunction Displays 39
5 Organization of Visual Information 39
5.1 Consistent Screen Organization 39
5.2 Consistent Presentation 39
5.3 Grouping of Information on a Display 39
5.4 Demarcation of Information Groups 40
5.5 High Priority Displays 40
5.6 Centering of Shared Displays 40
5.7 Instrumentation Grouping 40
6 Display Design 40
6.1 Font Style 40
6.2 Meaningful Abbreviations 40
6.3 Units of Measurement 40
6.4 Icons 40
6.5 Scaling in Standard Intervals 41
6.6 Expansion of Graphic Displays 41
6.7 Unobtrusive Grids 41
7 Control Design 41
7.1 Control Placement 41
7.2 Control Positioning for Simultaneous Operation 41
7.3 Location of Primary and Frequently Used Controls 41
7.4 Consistent Arrangement 41
7.5 Spacing Between Controls 41
7.6 Movement of Controls 41
7.7 Corresponding Movements 42
7.8 Return to Navigation Monitoring Mode 42
7.9 Minimal Actions 42
7.10 Consistency of Control Actions 42
7.11 Feedback 42
7.12 Ease of Operation of Controls 42
7.13 Display Obscuration by Operation of Controls 42
7.14 Controls for Important Functions 42
7.15 Prevention of Accidental Input or Actuation 43
7.16 Control Purpose 43
7.17 Simple Controls and Indicators 43
7.18 Operation of Controls 43
8 Control and Display Integration 43
8.1 Logical Arrangement 43
8.2 Location Consistency 43
8.3 Visual Information for More than One Watchstander 43
8.4 Control and Display Location 43
8.5 Simultaneous Use 43
8.6 Control/Indicator Distinctiveness 43
8.7 Readability of Instruments 44
8.8 Instrument Placement 44

8.9 Glare Minimization 44
8.10 Principal Maneuvering Instruments 44
8.11 Contrast Ratio 44
8.12 Character Type 45
9 Control and Display Failure Prevention 45
9.1 Loss of Power 45
9.2 Computer Network Failure 45

FIGURE 1 Immediate and Preferred Viewing Areas 38

SECTION 7 Design of Alarms and Warnings 47
1 Background 47
2 Terminology 47
3 General 47
3.1 Bridge Control System Failure 47
3.2 Alarm Acknowledgement 47
3.3 Fire and Emergency Alarms 47
3.4 Failure or Reduction of Power Supply 48
3.5 Sensor Input Failure or Absence 48
3.6 Alarm Status 48
3.7 Continuation of Alarms 48
3.8 Cancellation of Alarms 48
3.9 Alarm Minimization 48
3.10 Alarm Testing 48
3.11 Alarm Power Supply 48
3.12 Indication of Alarms 48
3.13 Presentation of Alarms 48
3.14 Modes of Alarms 48
3.15 Distribution of Power Supply Failure Alarm 48
3.16 Location of Alarms 48
4 Alarm/Warning Transfer System 49
4.1 Alarms Requiring Response 49
4.2 Fixed Location for Transfer 49
4.3 Alarm Acknowledgement on Bridge 49
4.4 Two-Way Speech Capability During Alarm Transfer 49
5 Alarms Concerning Navigation 49
5.1 Alarm System 49
5.2 Planned Route Deviation 49
5.3 Water Depth 50
5.4 Hydraulic Locking 50
6 Visual Alarms 50
6.1 Discrimination of Visual Alarms 50
6.2 Presentation of Visual Alarms 50
6.3 Presentation of Normal Conditions (No Alarm) 50
6.4 Flash Rate 50
6.5 Lamp Testing 50

6.6 Visual Alarms and Night Vision 50
7 Audible Alarms 51
7.1 Use of Audible Alarms 51
7.2 Cessation of Audible Alarms 51
7.3 Differentiation of Audible Alarms from Other Signals 51
7.4 Audible Alarm Sound Characteristics 51

SECTION 8 Procedures, Codes and Job Aids 53
1 Background 53
2 Terminology 53
3 Coding 53
3.1 General 53
3.2 Color Coding 54
3.3 Shape Coding 55
3.4 Audible Coding 55
4 Operating and Emergency Procedures 56
4.1 General Guidelines 56
4.2 Design of Procedures 56
5 Labels, Placards and Job Performance Aids 58
5.1 General 58
5.2 Functional Labeling 58
5.3 Label Terminology 58
5.4 Operating/Technical Manual Availability 58

TABLE 1 Color Coding Recommendations for Displays 54
TABLE 2 Color Coding Recommendations for Controls 54
TABLE 3 Basic Types of Audible Signals for Use on Navigation Bridges 56

SECTION 9 Work Environment 59
1 Background 59
2 Terminology 59
3 Vibration 60
3.1 Vibration Levels and Comfort 60
3.2 Whole Body Vibration Limits 60
3.3 Preventing Motion Sickness 60
4 Noise 60
4.1 General 60
4.2 Maximum Noise Levels 60
4.3 Location of Noise Sources 60
4.4 Audible Alarm Sound Pressure Levels 61
5 Lighting 61
5.1 General 61
5.2 Task Area Lighting 61
5.3 Glare 61
5.4 Adjustability of the Lighting System 61

5.5 Dark Adaptation 61
5.6 Lighting Controls 62
5.7 Flicker Avoidance 62
5.8 Lighting Control Device 62
5.9 Indirect Low-Level Lighting 62
6 Device and Instrument Illumination 62
6.1 Instrument and Control Illumination and Lighting 62
6.2 Lighting for Night Time and Dark Operations 62
6.3 Instrument Lighting 62
7 Heating, Ventilation and Air Conditioning 62
7.1 General 62
7.2 Temperature Range 63
7.3 Effective Temperature 63
7.4 Temperature Differences 63
7.5 Humidity 63
7.6 Hot Air Discharge 63
7.7 Cold Air Discharge 63
7.8 Air Velocities 63
7.9 Positive Pressure 63
7.10 Supply Airflow 63

SECTION 10 Maintenance by Bridge Persons on Watch Duty 65
1 Background 65
2 Terminology 65
3 Bridge Watchstander Maintenance 65
3.1 Minimize Maintenance Requirements 65
3.2 Maintenance Performed within the Bridge Area Only 66
3.3 Maintenance Interface and Communications 66
3.4 Bridge Deck Drainage 66

SECTION 11 Personnel Safety 67
1 Background 67
2 Terminology 67
3 Occupational Safety 67
3.1 Bridge Physical Hazards 67
3.2 Securing Equipment 67
3.3 Safety Equipment Accessibility 67
3.4 Secure Seating 67
3.5 Adequate Electrical Outlets 68
3.6 Refreshment Facilities 68
3.7 Emergency Lighting 68
3.8 Redundant Lighting Circuits 68
3.9 Handrails and Grab Rails 68
4 Mechanical/Electrical Safety 68
4.1 Electrical Circuit Fault Isolation 68
4.2 Grounding of Metal on the Bridge 68

4.3 Component Replacement Safeguards 68
5 Bridge Surfaces 68
5.1 Bridge Finishes.....68
5.2 Glare-Free Surfaces.....68
5.3 Non-Slip Surfaces 69
5.4 Robust Surfaces.....69
5.5 Bridge Deck Drainage 69

SECTION 12 Facilities..... 71
1 Background.....71
2 Terminology 71
3 Food and Refreshment 71
3.1 Design of Refreshment Facilities.....71
4 Sanitary Facilities.....71
4.1 Availability of Toilet Facilities.....71
5 Interior Décor 71
5.1 Bridge Color Choice 71
5.2 Interior Color Design 71
5.3 Reflectance Range of Colors.....72

TABLE 1 Reflectance Ranges of Typical Color Densities.....72

APPENDIX 1 Ergonomic Design and Evaluation Process..... 73
1 Introduction 73
2 Terminology 73
3 Navigation Bridge Ergonomic Design Processes 74
3.1 New Bridge Design Process.....74
3.2 Processes for Improving Design Aspects of Existing Navigation Bridges 81

TABLE 1 Human and Machine Capabilities 76
TABLE 2 Potential Verification Measures of Human Performance on Existing System.....90

FIGURE 1 Simple Function Allocation Model to Reduce Workload 77
FIGURE 2 Concept Development and Exploration 79
FIGURE 3 Demonstration and Validation Process.....80

APPENDIX 2 Glossary..... 93

APPENDIX 3 Acronyms and Abbreviations 97

APPENDIX 4 References..... 99

SECTION 1 Introduction

1 Background

The ABS *Guide for Bridge Design and Navigational Equipment/Systems* presents requirements that "are applicable to vessels possessing SOLAS certificates and having the bridge so designed and equipped as to enhance the safety and efficiency of navigation."

That Guide also recommends that the design of bridges is to be based on sound ergonomic principles. To support the bridge design and engineering community in promulgating these principles, these ABS *Guidance Notes for the Ergonomic Design of Navigation Bridges* have been developed.

A definition of Ergonomics is:

> *The scientific discipline concerned with the understanding of interactions among humans and other elements of a system and the profession that applies theory, principles, data and methods to design in order to optimize human well-being and overall system performance.*
>
> *International Ergonomics Association, 2000*

2 Application

These *Guidance Notes for the Ergonomic Design of Navigation Bridges* provide vessel designers with the ergonomic principles and data appropriate to the design of navigation bridges; and in doing so serve to supplement and support the ABS *Guide for Bridge Design and Navigational Equipment/Systems.* Ergonomic design guidance herein applies only to navigation bridges and associated equipment.

These Guidance Notes do not provide more generally applicable detailed ergonomic design guidance or data, such as control dimensions, environmental limits or human anthropometry. Those data can be found in the ABS *Guidance Notes on the Application of Ergonomics to Marine Systems*.

Extensive reference is also made to the ABS *Guide for Crew Habitability on Ships* and the ABS *Guide for Crew Habitability on Offshore Installations*. These documents present guidance related to the design of the accommodations and the ambient environment of a vessel's bridge such as human whole body vibration, noise, indoor climate and lighting.

3 Scope

Guidance in this document is consistent with the principal international statutory and discretionary guidance addressing the design of bridge systems (such as: IACS Standard for Bridge Design, Equipment and Arrangement; SOLAS V; and IMO Guidelines on Ergonomic Criteria for Bridge Equipment and Layout). The guidance contained in this document is deemed generally appropriate to seagoing vessels of various types and categories, such as cargo vessels, passenger vessels and certain offshore structures and vessels, (e.g., surface-type drilling units, offshore supply vessels and mobile offshore drilling units). This being the case, this document provides:

i) *General ergonomic design guidance* (design principles) for navigation bridges (Section 2, "General Guidance"),

ii) A *process* to identify individual vessel bridge requirements to guide application of ergonomic design principles (see Appendix 1, "Ergonomic Design and Evaluation Process"), and

iii) *Specific bridge design guidance* gleaned from international sources, such as the International Maritime Organization (IMO) and the International Association of Classification Societies (IACS) (see Sections 2 through 11).

These Guidance Notes do not restate all the bridge-related requirements of international agreements and statutes or any particular flag state requirements imposed on the design of navigation bridges. Designers must use those source documents to create and define a database of bridge requirements for any particular bridge design effort. This document can be used to support the identification or refinement of requirements based on: ergonomic analysis techniques; the application of guiding principles of ergonomic design as related to bridges; and the application of detailed guidance contained in these Guidance Notes.

SECTION 2 General Guidance (Principles of Ergonomic Design)

1 Background

This Section presents an overview of the principles of human interface design appropriate to the design and use of navigation bridges. These principles are applicable to the design of displays, controls and the bridge workspace for persons on watch duty who must conduct and monitor operations and respond to ambient and operational conditions. Applying these principles to bridge design will lead to interfaces and work environments that simplify bridge operations, reduce human error, are maintainable and limit the physical demands imposed on persons on watch duty and other bridge personnel.

The following eight principles are presented:

Principle 1 - Define the roles and responsibilities of bridge personnel
Principle 2 - Design for human limitations, capabilities and expectations
Principle 3 - Arrange bridge devices, controls and displays to maximize access
Principle 4 - Design displays consistent with task requirements
Principle 5 - Design simple, direct and easy to use inputs and controls
Principle 6 - Design for productive performance and to reduce human error
Principle 7 - Provide job aids and training
Principle 8 - Perform testing.

2 Terminology

Achromatic: Designating color perceived to have zero saturation and therefore no hue, such as neutral grays, white or black.

Alarm: A visual and/or audible signal indicating an abnormal situation.

Annunciation: An audible signal indicating a condition or system state (usually of an emergency or off-normal nature) via audible signals.

Expectation: A belief about or mental picture of the future. In ergonomic contexts, an expectation is a belief concerning the effect of an action, especially a control action.

Function: The appropriate action of any special components or part of a system to meet some defined purpose or objective; specific occupation or role; an assigned duty or activity.

Habituation: The reduction of a task performance likelihood following repeated false exposures to the stimulus (e.g., an oft repeated false alarm will reduce its ability to command a timely response).

Human Task: A piece of work performed as part of one's duties; a function performed; an objective.

Perception: The process of becoming aware of the immediate environment through any of the senses.

Situation Awareness: The degree of accuracy by which one's perception of the current environment mirrors reality.

Warning: A cautionary or deterrent indication of an impending abnormal situation.

3 General Guidance

3.1 Principle 1: Define the Roles and Responsibilities of Bridge Personnel

For any given bridge design activity, the relative roles and responsibilities of humans and hardware/software need to be defined. Roles and responsibilities will vary depending on vessel trade, owner/operator objectives and processes, level of vessel automation and other factors. Whatever the specific contexts, the roles and responsibilities of the bridge personnel should be clearly identified.

The design process presented in Appendix 1, "Ergonomic Design and Evaluation Process" provides a method to identify bridge design requirements based on human-machine functional allocation. The following provides general guidance on defining roles and responsibilities for bridge personnel.

3.1.1 Identify Bridge Functions and Conduct Requirements Analysis

Identify specific functions that bridge systems (including personnel) need to perform. These should include not only those functions performed by equipment (e.g., depth sounding), but also those that are essentially human (e.g., visual lookout, route planning). The objective of this is to completely characterize what has to be accomplished from the bridge, in terms of:

i) Functions (e.g., sea surveillance),

ii) Means to perform or support the function (e.g., radar sets, binoculars),

iii) Requirements of functions (e.g., detect target presence, determine range and bearing, determine course and speed, compute closest point of approach, etc.).

For each function, requirements are further analyzed to identify (or define by allocation) the specific roles of bridge personnel. Each human role/function will have associated human tasks that need to be identified and listed.

3.1.2 Generate Task-Based Requirements

Identify bridge personnel tasks and the objectives of those tasks. Examine each task to determine information requirements, control requirements, as well as the skill and knowledge required to the perform tasks.

3.1.3 Identify Task Overlap

Identify, based on contextual and environmental factors, which tasks may overlap in time or bridge location. Examine the relationship between tasks and the subsequent prioritization of tasks.

3.1.4 Specify System Failure Procedures

Consider what information and control provisions must be available from the bridge in case of a loss of automated functions. As far as possible, bridge systems should "fail-safe" (meaning that they do not fail leaving the systems in a hazardous or risky condition).

3.1.5 Solicit Bridge Personnel Inputs to Requirements

Solicit experienced bridge personnel to identify and verify human tasks, as well as associated information, displays and controls required to perform those tasks.

3.1.6 Design for Efficiency and Control of Workload

Select and arrange bridge equipment and design jobs and tasks so that bridge personnel:

i) Can reliably perform their functions

ii) Are productive

iii) Are not overloaded with work.

3.2 Principle 2: Design for Human Capabilities, Limitations and Expectations

Humans and machines have, of course, very different capabilities. Humans are creative, can make decisions in the face of uncertainty, are highly mobile, learn rapidly, can generalize knowledge to novel situations, are communicative and have massive sensing and sensory processing capability. Machines can exert great force for sustained periods, can do repetitive work flawlessly for long periods, can withstand a wide range of physical environments and do not get bored, complacent, forgetful, tired or angry.

The objective in bridge design is to take full advantage of the relative capabilities and limitations of humans and machines. In the broadest sense, humans should be involved in vessel management and planning activities and should communicate those plans and activities to the machines that perform the work (without a sense of tedium). Humans also monitor machinery and intervene when plans are not followed and perform replanning as needed when the environment or material condition of the equipment changes. In other words, humans plan and decide and machines implement the outcomes of those decisions at the bidding of the human. Guidance related to design of navigation bridges consistent with human capability is presented below.

3.2.1 Limit Human Data Processing

The design of interfaces should be compatible with human capabilities and limitations as information processors. Where possible, machines should perform data manipulation and present the result to the human for decision-making. A common example is the Automatic Radar Plotting Aid (ARPA) radar that computes Closest Points of Approach (CPA) to other vessels. The human uses that result in the context of knowledge-based decision making (e.g., applying the Rules-of-the-Road, negotiating passing plans and replanning ship's course and speed). Machines should be used for such tasks as storing masses of information or performing complex calculations. Humans should be used as sensors, planners and deciders and monitors of machine performance.

3.2.2 Organize Interfaces in Harmony with Physical Layouts

Where appropriate, control and display layouts representing equipment arrangement (e.g., thruster orientations, ballast tank arrangements, navigation light control panels) should mimic the spatial and functional relationships of the equipment monitored and controlled. Where possible, mimic lines should be used to show the physical relationships (e.g., lines connecting pumps and valves) of the components.

3.2.3 Accommodate Human Expectations

Experience influences how humans interpret a display or operate a control. Equipment design should be consistent with those expectations. Design of control actions and display response (directions of movement) should be consistent across workstations. Be concerned where different vendors are used to select/assemble bridge hardware and software (vendors may have designed to different expectations) or where different teams generate designs for different interfaces.

3.2.4 Standardize Display Characteristics

Display characteristics should be consistent among locations (or computer display pages):

i) Colors should have the same meaning across all displays.

ii) Schematics should have similar formats (e.g., process flow is normally from left to right) to maintain, when possible, an exact spatial mapping of one display onto another.

iii) Computer display and panel display information layouts should be spatially compatible with one another.

3.2.5 Facilitate Human Attention

Matching the task to the attention strengths and capabilities of the human can mitigate possible errors due to distraction, complacency, habituation and high workload:

i) Avoid distractions or requirements to perform meaningless tasks (at least during a watch).

ii) Place frequently used and important displays (e.g., navigation, helm control, radar) in a central viewing area.

iii) Ensure alarms are not so frequent that they cease to have an attention-getting effect.

iv) Use meaningful information groupings so that bridge personnel will be able to easily deal with a large amount of information.

v) Avoid tasks that compete for attention (e.g., paperwork that is not related to standing watch and keeping a proper lookout).

vi) Define clear task priorities.

3.2.6 Design within Physical and Perceptual Limits

These guidelines address the compatibility of equipment design within the limits of humans to exert force, reach and manipulate objects and sense the physical environment:

i) Controls should be placed within easy reach and adjacent to related displays.

ii) Displays that are viewed from a nominal position should be:

- Easy to read (e.g., character size compatible with viewing distance),
- Within an immediate field of view (directly in front of the viewer) and not obscured,
- Provided sufficient color, brightness and contrast,
- Large enough to be seen from expected viewing distances and under expected ambient environments (day/night and weather conditions).

iii) Control the physical environment so that ambient conditions do not interfere with visual or audible signals.

iv) Guard against inadvertent control operation.

v) Arrange the bridge so that objects can be easily and readily reached and manipulated.

3.2.7 Limit Memory Requirements

Human memory is limited in capacity, is often unreliable (i.e., error prone) and can be affected significantly by factors such as fatigue, stress and physical health.

i) Provide efficient methods of calling up display of important or changing information.

ii) Avoid having to page through several displays to access frequently used or critical information – It should be possible to display time critical information immediately.

iii) Avoid the need to cross-reference between information displays.

iv) Clearly identify all controls and displays.

v) Use simple and memorable codes that are easily distinguishable.

vi) Include rapid information updating so that bridge personnel do not have to wait.

vii) Provide obvious, ongoing display of automated system status (e.g., to indicate when automatic processes have been manually overridden, disabled or failed).

3.2.8 Use Color Coding to Simplify Information Search and Interpretation

Where carefully applied, color can be very effective in: reducing visual search, simplifying interpretation of displayed information, reducing ambiguity in decision making and reducing requirements to recall information from memory. Inappropriate use of color can lead to confusion and error. When designing color codes, consider the following:

i) Add color only after the effectiveness of an interface has been maximized in an achromatic format.

ii) Do not use color as the sole coding mechanism to convey information. Color coding should be redundant to some other coding mechanism (such as symbols or text).

iii) The use of color should not reduce readability of displays, labels, maps, etc.

iv) Color should be applied to avoid or minimize difficulties for personnel having impaired color vision.

v) Where color coding is employed to denote discrete conditions (e.g., auto-pilot on/off, pump is running, in standby or off, etc.), no more than seven different colors and associated meaning should be used. If similar hues are used, they should be used only with logically related information.

3.3 Principle 3: Arrange Bridge Devices, Controls and Displays to Maximize Access

3.3.1 Component Grouping to Minimize Bridge Traffic

Group components, consoles and devices according to frequency, importance and sequence of use. Arrange bridge components to minimize the need for the persons on watch duty to move to alternative positions on the bridge. For example, locate vessel-to-vessel communications devices adjacent to radar displays and maneuvering stations. Arrange components on the bridge to facilitate unobstructed external visibility, especially forward-looking. Ensure that any task (or several tasks that need to be performed simultaneously) can be performed from a single standing or seated position.

3.3.2 Arrange Displays by Task Association

When possible, group all of the information relating to a particular task together in one place.

i) Locate related information together.

ii) Locate related items such that they are easy to associate.

iii) Locate displays close to (or on) other displays and controls with which they are associated.

3.3.3 Centralize Important Information

Centralize important information to allow actions to be prioritized.

3.3.4 Optimize Arrangements

Optimize arrangements to support time and safety critical tasks. Layouts should emphasize ease and reliability of performance of safety critical tasks, such as collision avoidance, tug interface, piloting and berthing.

3.3.5 Group Information to Support Operations

Bridge personnel should not have to page through computer displays to collect information required for a particular operation.

3.4 Principle 4: Design Displays Consistent with Task Requirements

3.4.1 Provide External and Internal Consistency

Coding should be consistent among software displays, hardware displays, written documentation and job aids. For example, when designing symbols used to represent equipment (e.g., pumps, thrusters, sea chests, impellers) use the same symbols that bridge personnel are familiar with from drawings, labels, procedures, national and industry standards or training materials.

3.4.2 Provide Situation Awareness Displays

Provide situation awareness displays to keep a summary check on the whole of the system and environment for which bridge personnel have responsibility. Ensure sufficient time to refresh situation awareness at the following times:

i) Watch turnovers

ii) When additional staffing must be used (e.g., in emergencies, port approaches and departures)

iii) Following changes in the use of automation (e.g., changing from auto to manual steering or transitioning to bridge monitoring of engineering functions during times when engine rooms are unattended)

iv) As changes in requirements for surveillance, navigation and piloting occur (e.g., due to increased sea-lane occupancy, weather changes or system failures).

3.4.3 Base Display Design on Information Requirements

Design displays based on the requirements of the task. Avoid prior (hardware or software) display formats as a sole basis for the design of computer displays or back-up hardwired displays.

i) Involve bridge personnel in the identification of interface requirements (be advised that their understanding of requirements may be based on prior designs and practices that may have been clumsy).

ii) Involve bridge personnel in the usability evaluation of interfaces under development.

3.4.4 Provide Sufficiently Accurate and Precise Information

Provide information to the level necessary for accuracy and precision required by the task. For example, if a task requires information display only in whole units, do not present decimal values in displays (e.g., “Depth under keel 12 feet,” versus “Depth under keel 12.214 feet”). Information accuracy and precision includes how current (up to date) information is (as it changes with the passage of time).

3.4.5 Limit Display Complexity

The contents of a display should provide all of the information required to perform tasks in a simple, directly usable form (e.g., without having to transform or extrapolate the information).

3.4.6 Display Actual Equipment Status

Display equipment status (e.g., valve status or rudder position) directly from the actual equipment and not from the demanded control setting (e.g., actual rudder angle as opposed to ordered angle).

3.4.7 Group Information to Support Task Performance

Group information to make it easy to make data comparisons, discern cause and effect relationships, identify time lags and assess rates of change in processes such as changing vessel course against other targets' movements.

3.4.8 Prioritize Alarms and Audible Indicators

An alarm is a visual and/or audible signal typically indicating an abnormal situation demanding human attention and response (e.g., a depth under keel alarm). An audible indication is usually a display of status or vessel condition (e.g., tones that indicate a telephone or radio call is incoming or that an equipment function has failed).

Priorities of alarms and audible indicators should be clearly coded. Prioritize alarms to allow quick assessment of the importance of simultaneous alarms. Prioritization schemes include:

i) Sequencing alarms in a way that enables the development of abnormal events to be better understood.

ii) Separating critical alarm information from information or status indications.

iii) Using dedicated computerized alarm displays.

iv) Provision of distinct audible indicators (being separate from alarms) that indicate automatic or semi-automatic actions of the system (e.g., transitioning from autopilot to manual steering). If a failure by the persons on watch duty to notice the occurrence of an audible indicator can lead to unsafe conditions (e.g., failure to notice that the vessel's gyro has failed or low lube oil pressure in the steering gear) then that condition should be considered an *alarm condition* and should not be designed as a simple *audible indication*.

3.4.9 Avoid Nuisance Alarms

Alarms are used to signify urgent events and conditions. When alarms are presented, only to be discovered as false or of no real importance, subsequent alarms can tend to be regarded as unimportant, to the point of being dismissed (not investigated) entirely. It is important that audible and visual alarms consistently signify events or conditions that require immediate action. This can be accomplished by the following:

i) Use audible alarms for abnormal or emergency conditions only.

ii) Do not use alarms to indicate equipment status or normal conditions (e.g., watertight doors closed, running lights on, control valve position, etc.).

iii) It should be possible for every bridge alarm to gain immediate attention (even if personnel are not able to deal with the condition immediately).

3.4.10 Acknowledging Alarms

It should not be possible to dismiss critical alarms until the initiating condition is resolved. Locate acknowledgement devices such that audible components of alarms can be acknowledged while allowing alarm information to be read. It should be possible to silence an audible alarm only when that does not cause a loss of alarm information (e.g., visual display of the alarmed parameters).

3.4.11 Avoid Alarm Ambiguity

i) Alarms should have a unique code (audible signal) if a unique type of response is required.

ii) Color should not be the only means of distinguishing between alarm and non-alarm conditions.

iii) Labeling and other information should obviously associate the alarm indicator with the equipment or condition about which the alarm was triggered.

3.5 Principle 5: Design Simple, Direct and Easy to Use Inputs and Controls

3.5.1 Provide Direct Human Control

Design the system interaction such that bridge personnel pace the tempo of operations. Ensure that the human controls the pace of control entries by explicit actions and that such entries occur through explicit human actions. This includes the actions of automated systems by allocating to the human the function of determining and inputting plans and activities for automated system performance (such as voyage plans) and by providing the human with the ability to intervene in automatic system performance and functioning.

3.5.2 Clearly Identify Control Modes

Automated, aided or manual control modes (e.g., auto-pilot steering vs. manual control of the steering wheel) should be clearly indicated by a display associated in close proximity to the controlled component.

3.5.3 Operating Mode Changes are Indicated and Annunciated

When transitioning between control modes (e.g., from manual to auto-pilot steering or transitioning control of the propulsion system from engineering spaces to the bridge), ensure that:

i) Positive action on the part of bridge personnel is required (e.g., by positioning a control or issuing a computer command)

ii) At the time of transfer, associated displays need to indicate the current, actual control mode and then announce the transfer, with an audible signal that sounds at each affected workstation

iii) In the case of the steering wheel, if transfer of helm control to the steering wheel (or joystick or thruster control) is accomplished solely by motion of the device (e.g., a helmsman assumes manual control by directly manipulating the wheel) a positive indication of the mode of control should be provided by conspicuous visual and audible displays.

3.5.4 Provide Guidance for Human Intervention in Automated Systems

Guidance (in the form of written procedures or placards) for when human invention is needed should be explicit for the following conditions:

i) When to take over from automatic functions or control

ii) When and how to hand over control from a local control space to another location

iii) When to shut down equipment or systems.

3.5.5 Provide Direct and Immediate Feedback for Control Actions

When possible, locate controls and displays (related by action and effect/feedback) together.

i) All the effects of an action or command on the process should be simultaneously observable on associated displays. If equipment of system response time is slow, feedback should be provided indicating the action has been initiated and is progressing (e.g., rudder position and rate of turn indicators).

ii) If more than one person controls the action of a bridge (or related) system, all relevant information should be simultaneously available to the person responsible for coordinating the task.

iii) When possible, supply all the necessary information simultaneously (e.g., in parallel rather than sequentially) that is needed for a diagnosis or a control decision.

3.5.6 Provide Simple Computerized Display Navigation

Navigation through computer displays should not require that bridge personnel remember paths to information. Rather, they should be led to the information through recognition techniques (e.g., by use of pop-up menus, navigational maps or navigation palettes).

i) Help bridge personnel not to get lost when navigating among windows. Limit the depth of window and menu hierarchies to no more than three levels.

ii) Provide maps or other cues to provide awareness of "where they are" in the interface.

3.5.7 Response Latency and Visibility of System Status

Where system responses to control actions are slow or delayed, provide intermediate indications of system response. For example, an indication of a ship's speed of course change can be provided by a Rate of Turn indicator for a ship with a wide turn radius and slow vessel response. This allows the helmsman and deck officer to more immediately verify system response to the control order.

3.6 Principle 6: Design for Productive Performance and to Reduce Human Error

3.6.1 Provide Error Prevention and Tolerance

To the extent possible, equipment should safeguard against human error. In other words, actions that could directly lead to damage to the vessel, people or the environment should be provided guarded controls or in the case of software, potentially dangerous actions should require a confirmatory action (e.g., "Click CONTINUE to confirm that all watertight doors are to be opened or Click CANCEL to exit."). Further, and where possible, software should be able to monitor and advise on the safety of human actions. An example of this is a radar system that computes a closest-point-of-approach to a navigational hazard or other vessels navigating in the near vicinity after a change in helm order and alerts the persons on watch duty if there is a danger of collision.

3.6.2 Consider Task Communication Needs

Communication systems should be designed to:

i) Avoid requiring personnel to frequently move to different locations on the bridge to access communications equipment.

ii) Consider using portable or wearable, as well as fixed, communication equipment, where item *i),* above, is considered difficult to comply with.

3.6.3 Avoid Control Conflict

Avoid simultaneous control of systems or equipment from different workstations. Avoid two or more people being able to simultaneously influence the same part of a process from different control and display locations (e.g., controlling engine speed from an engineering station and from the bridge). In other words, do not require ship personnel to compete for control of a system.

3.6.4 Compatibility of Bridge Staffing with Operational Requirements

The following principles should be applied to ensure compatibility among: the bridge staffing complement; the tasks to be performed; the environment (time of day, weather conditions, congestion of waterways, etc.); and the bridge design and its automation.

i) Determine staffing for all modes of operation, based on high workload operations.

ii) Consider whether staffing levels, skills and experience will be sufficient for all known operational and failure conditions.

iii) Consider staffing implications for worst-case scenarios.

iv) Consider staffing for normal conditions.

v) Allocate tasks according to skills and experience.

3.7 Principle 7: Provide Job Aids and Training

3.7.1 Identify Required Knowledge, Skills and Abilities

Know what bridge personnel have to do and provide the training to perform the required tasks. Performing a task analysis (see Appendix 1) is sufficient to identify bridge personnel task requirements.

3.7.2 Identify Training Needs and Requirements

i) Define training needs specific to a given bridge design and specific automated functions.

ii) Identify automated functions and what interventions may be necessary by bridge personnel. Identify the conditions dictating automated or human task performance.

iii) Provide training involving vessel control when automated control functions or information is unavailable.

iv) Provide training for conditions where important tasks compete for attention.

v) Provide hands-on training in transitioning between automatic and manual control functions.

3.7.3 Provide Procedures

i) Provide available written or on-line procedures to guide and document infrequent, complex or safety critical operations.

ii) Through procedures, indicate appropriate human actions in case of particular alarm conditions (scenarios), rather than cluttering displays with instructions.

iii) Provide procedures to address infrequent or postulated conditions.

iv) Provide on-line help.

3.7.4 Provide Adequate Labels and Warnings

Provide standardized, durable, readable, usable labels for all equipment and components. Labels and marking should be consistent in terms of:

i) Coding and colors used

ii) Mounting location

iii) Language and nomenclature

iv) Stylistic design.

3.8 Principle 8: Perform Testing

3.8.1 Verify Functionality

Verify that the identified functional requirements of the bridge are correctly implemented.

3.8.2 Perform Usability Testing

Observe bridge personnel using hardware and software. Simulate infrequent, uncommon, hazardous and unpredictable tasks. During testing note:

i) Any observed confusing or error-inducing design aspects

ii) Bridge personnel observations (Masters, Mates, lookouts, etc.)

iii) Unnecessary work or task activities

iv) Observed or reported errors in task performance

v) Bridge persons on watch duty comments on the usability of components, tasks or arrangement of components.

vi) Usability testing should occur throughout the design cycle of the bridge and at every instance of bridge equipment modification or upgrade.

This Page Intentionally Left Blank

SECTION 3 Bridge Functionality

1 Background

Work required of bridge personnel extends well beyond that imposed by primary operational and system requirements. Often, analysis of functions and identification of requirements examine only those tasks directly associated with piloting and navigation, interfaces with engineering and means to address a limited number of off-normal events. Additional duties, however, are required of bridge personnel to meet additional technical, administrative and statutory requirements and so on. These requirements should be examined as well during the design of navigation bridges.

Design of navigation bridges should consider the entirety of the watchstander job – whether or not specific responsibilities involve some specific hardware interface. Decisions as to how to apply automation to influence bridge personnel workload, for example, must consider task demands that have no attendant hardware and software or that require general purpose hardware and software (e.g., electronic mail).

2 Terminology

Alarm: A visual and/or audible signal indicating an abnormal situation.

Annunciation: An audible signal indicating a condition or system state (usually of an emergency or off-normal nature).

Function: The appropriate action of any special components or part of a system to meet some defined purpose or objective; specific occupation or role; an assigned duty or activity.

Human Task: A piece of work assigned or done as part of one's duties; a function to be performed; an objective.

Situation Awareness: The degree of accuracy by which one's perception of the current environment mirrors reality.

Warning: A cautionary or deterrent indication of an impending abnormal situation.

3 General Guidance

3.1 Bridge Functions

Bridge personnel task requirements should consider the types of functions listed in Table 1, "Sample Bridge Functions and Responsibilities," when performing bridge design tasks such as:

i) Designing overall layouts and component arrangements

ii) Selecting devices to meet requirements

iii) Estimating and allocating workload

iv) Designing procedures and job aids

v) Determining communications requirements

vi) Determining internal and external visibility requirements.

Note in Table 1 that not all functions are primarily bridge related. These functions are addressed in the table since bridge persons on watch duty must at least maintain cognizance of those functions.

3.2 Growth of Bridge Functionality

Allow for update of bridge functions, in terms of both expanded functional requirements (e.g., Voyage Data Recorders) and system upgrades since bridge requirements and components will change over the life cycle of use and new technology may be employed, replacing older equipment. Provisions for such growth of the functionality of a bridge and its technology updates, should be anticipated and accommodated during initial design. For example, it is likely that new or additional alarms will be required and initial design of alarm systems should anticipate that growth.

3.3 Ancillary Bridge Functions

Task and functional responsibilities of bridge personnel will change over time. Changing bridge requirements (due to international agreements, port/coastal state requirements, customer demands, changes in owner operating philosophies and practices and so on) will alter the job and duties of bridge personnel. One example of such a change would be when a vessel moves from a manned to an unattended engine space. In this case, transitioning to operations associated with unattended engineering spaces introduces bridge requirements such as the following:

i) Extensive monitoring of propulsion systems (operation, start-up, emergency shutdown, fuel system, lubrication systems, cooling system, alarm conditions, ballast and trim, etc.)

ii) Monitoring electrical generators

iii) Control of other fire suppression systems

iv) Bilge monitoring and management.

In addition, numerous other control or alarm conditions related to engineering and auxiliary systems may be required to be monitored/controlled from the bridge, including:

i) Steering gear alarms (e.g., power failure, failure to override autopilot)

ii) Fire detection and fire fighting (fire main displays and alarms, fire detection panels)

iii) Release of towing hook or lines (for towing vessels)

iv) Gas monitoring and detecting (hydrocarbon and explosion concentrations limits)

v) Loss of ventilation/refrigeration to cargo tanks/containers

vi) Liquid levels in oil cargo tanks (high and high high alarms)

vii) Steering gear status (failures, location of control, off-normal conditions, etc.)

viii) Bilge alarms.

TABLE 1
Sample Bridge Functions and Responsibilities

Interfacing with Deck Operations Anchoring Bunkering, Storing Cargo (load plan, lightering, etc.) Cargo management Direct Shore Gangs Docking/undocking Line Handling Line/wire Maintenance Pilot embarkation/debarkation Small boat deployment and recovery Tug and Towing Operations **Navigation, Piloting, Vessel Control** Berthing/Unberthing Area Surveillance – visual Area Surveillance – auditory Surveillance – sea (state, tides, currents, bottom conditions, hazards to navigation, temperature, etc.) Communications - Internal Communications – External Collision Avoidance/Traffic surveillance Tug interface Helm control/Conning Hull Performance/Station Keeping Bridge Maintenance Maneuvering in congested waters Maintain trim and ballast Signals and lights Lookout Position Fixing Record/chart Keeping Voyage Track Keeping Voyage Planning Weather Monitoring **Awareness of Maintenance Activities** Vital Systems Propulsion Hull Schedules/Equipment availability Calibrations (LORAN, GPS, etc.)	**Miscellaneous/Special Operations** Extreme Weather and Seas Fire - Large and Small Flooding/Ballast control Collision/Grounding/Stranding Internal Security Loss of Propulsion/Steering Search and Rescue/Man Overboard Vessel Security Fuel Spills/Environment Hazards Bridge - Housekeeping Medical Structural Maintenance **Performing functions related to unattended engine rooms:** Monitoring/control of propulsion systems (operation, start-up, emergency shutdown, fuel system, lube systems, cooling system, alarm conditions) Steering Gear Monitoring Electrical System Fire main control Fire suppression activation Bilge monitoring and management Pollution monitoring and control **Administration** Port entry (Pilots, Dock/Harbor Masters, etc.) Log keeping NOAA/Weather service/reporting Oceanographic reporting Health Care Ship's Meetings Finance/Payroll Planning (watch schedules, hours of rest) Crew assessment - fitness In-port inspections (P&I, auditors, Customs, Immigration, maintenance personnel, suppliers, vetting inspectors, Port State Control, Port Logs/Records, etc.) Stores logistics and loading Personnel issues (STCW, etc.)

The point of this discussion is that task requirements of bridge personnel extend beyond those directly related to piloting and seamanship and task requirements will likely change over the life-cycle of a vessel.

To the extent possible, design of the navigation bridge should anticipate and accommodate planned or unexpected change and growth in bridge functionality in terms of:

i) Alarming and annunciating systems

ii) General space allocated to functional areas

iii) Potential changes in bridge manpower

iv) Design of communications systems

v) Design of computing systems

vi) Persons on watch duty workload and bridge staffing.

SECTION 4 Bridge Arrangement and Layout

1 Background

This Section specifies the basic function and design requirements for bridge arrangement and layout. It has been developed to help ensure that designs of ships' bridges adequately provide for the requirements for safe navigation by preventing confusion arising from bridge layout, designing for ease of device access and use and reducing workload and human fatigue.

2 Terminology

Accessibility: The ability for personnel to easily access equipment that requires maintenance, inspection, removal or replacement while wearing the appropriate clothing, including personal protective equipment and using all necessary tools and test equipment.

Anthropometrics: Data relating to physical body dimensions. It includes body characteristics such as size, breadth and the distances between anatomical landmarks, such as elbow to fingertip

Anthropometric Percentile: Given the range of variability of [human] bodily dimensions, anthropometric data are typically expressed as percentile statistics, such as 5th or 95th percentile. A percentile statistic defines the anthropometric point at which a percentage of a population falls above or below that value. For example, the seated eye height of a 95th percentile North American male is 850 mm (33.5 in), so by definition, 5 percent of North American males will have a seated eye height of greater that this figure and 95 percent will have a lesser seated eye height.

Bridge: Area from which the navigation and control of the vessel is exercised, including wheelhouse, chartroom area and bridge wings.

Bridge Wing: Parts of the bridge on both sides of the vessel's wheelhouse that extend to the vessel's sides.

Catwalk: Extension to a deck that is wide enough to allow the passage of a person.

Chartroom Area: Part of the wheelhouse situated and equipped for adequate performance of voyage planning/plotting activities.

Commanding View: View without obstructions that would interfere with the ability of a navigator to perform all immediate tasks.

Communications Workstation: Workstation for operation and control of the equipment for distress/safety communications and public correspondence communications.

Conning Position: Place on the bridge with a commanding view that is used by navigators when commanding, maneuvering and controlling a vessel's movements.

Field of View: Angular dimension of a scene that can be observed from a position on the vessel's bridge.

Helmsman: Person who steers a vessel while underway.

Monitoring: Act of constantly checking equipment and surroundings in order to detect changes.

Monitoring Workstation: Workstation where formal vessel monitoring activities are performed.

Navigation and Maneuvering Workstation: Workstation where vessel's speed and course are considered and controlled.

Navigator: Person navigating, operating bridge equipment and maneuvering the vessel.

Wheelhouse: Enclosed area of the bridge.

Workstation: Position at which one or several tasks constituting a particular activity are carried out. This position includes a combination of job-related items necessary to fulfill job tasks, such as the console, with all devices, equipment and furniture.

3 Internal Visibility

3.1 Height of Lower Edge of Front Windows

The height of the lower edge of the front windows should allow a forward view over the bow, from which a person seated at the workstations can monitor, navigate and maneuver. The height of the lower edge of front windows above the deck should be kept as low as possible. It should not, as far as practicable, be more than 1000 mm (39 inches) above the deck.

3.2 Height of Upper Edge of Front Windows

The height of the upper edge of the front windows should allow a forward view of the horizon for a person in a standing position with a standing eye height of 1800 mm (71 inches) at the navigating and maneuvering workstation.

i) If 1800 mm (71 inches) eye height is unreasonable and impractical, the eye height may be reduced, but should not be less than 1600 mm (63 inches).

ii) The height of the upper edge of the front windows above the deck should be as high as practicable and at least allow a forward view of the horizon when the bow is 10° below its even keel position.

iii) The minimum height of the upper edge of the front windows above the deck surface should be 2000 mm (79 inches). (See Figure 1, "Example of Height of Upper Edge of Front Window in Relation to Eye Height.") The dimensions in Figure 1 are based upon an eye height of 1800 mm (71 inches), for a person of 1900 mm (75 inches) stature, at a distance of 750 mm (30 inches) from the bridge front bulkhead. As a point of reference, the standing eye height of a 95th percentile Northern European or North American male is approximately 1750 mm (69 inches) and stature of that same 95th percentile male is approximately 1860 mm (73 inches).

iv) For arrangements where the navigator would normally stand further back from the bridge-front bulkhead, the same eye height should be used to determine the height of the upper edge of the front windows.

3.3 Window Framing

Divisions/frames between windows should be kept to a minimum. No frames, including the centerline, should be installed immediately forward of any workstation. The frames between front windows should not exceed 150 mm (6 inches). If stiffeners between windows are to be covered, this should not cause further obstructions of the field of view from any position inside the wheelhouse. If stiffeners are used, frames should not exceed 100 mm (4 inches) in width and 120 mm (4.7 inches) in depth. In no case should horizontally sliding windows be used.

3.4 Window Inclination

To help avoid reflections, the bridge front windows should be inclined from the vertical plane, top forward, at an angle of not less than 10° and not more than 25° (see Figure 1). The rear and side windows should be inclined from the vertical plane top outboard, at an angle of not less than 10° and not more than 25°. Exceptions can be made for windows in bridge wing doors.

FIGURE 1
Example of Height of Upper Edge of Front Window in Relation to Eye Height

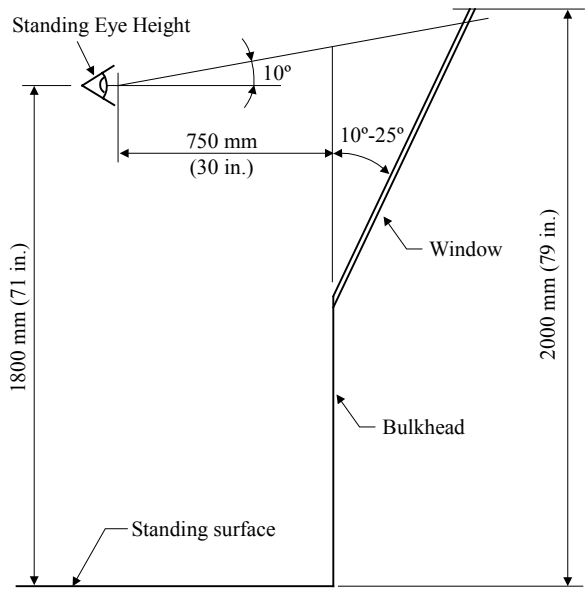

3.5 Clear View

A clear view through at least two of the bridge windows and depending on the bridge configuration, an additional number of windows should be provided at all times. A clear view should be provided at all times, regardless of the weather conditions.

3.5.1 Bright Sunshine

To ensure a clear view in bright sunshine, sunscreens with minimum color distortion should be provided at all windows in front of workstations. Such screens should be readily removable and not permanently installed.

3.5.2 Inclement Weather

Heavy-duty wipers should be provided for the majority of the front windows. These wipers should do the following:

i) Include an interval function and fresh water wash

ii) Be in accordance with ISO 3904 if clear view screens are installed

iii) Be capable of operating independently of each other

iv) Have efficient cleaning, de-icing and de-misting systems installed to ensure a clear view in all operating conditions

v) Have heated glass panels, where installed, be in accordance with ISO 3434

vi) Include a fixed catwalk with guardrails, fitted under the bridge windows, to allow cleaning of the windows in the event of a failure of other cleaning systems.

3.5.3 Glass Characteristics

Neither polarized nor tinted glass should be used.

3.6 Visibility from Bridge Window

It should be possible to watch the area in front of the bridge superstructure from the wheelhouse.

3.6.1 Position Close to Forward Center Window for Adequate Conning

A position close to the forward center window should be provided with a clear view. If the view in the centerline is obstructed by large masts, cranes, etc., two additional positions giving a clear view ahead should be provided, one on the port side and one on the starboard side of the centerline, no more than 5 meters (16.5 feet) apart.

3.6.2 Access to Front Window

A second close approach access, besides the forward center window position described above, should be possible, or the width of the position described above should be sufficient to accommodate two people.

4 External Visibility

Guidance in this Subsection generally applies to ships. For floating units which do not move frequently and that normally can not meet blind view requirements, visibility procedures should be set up as prescribed in the Convention on the International Regulations for Preventing Collisions at Sea, as amended (1972, rules 6, 7 and 8) with respect to safe speed, posting of lookouts and watches and use of sound signals and collision avoidance using Radar and plotting devices.

4.1 View of Sea Surface

The view of the sea surface from the conning position should not be obscured by more than two vessel lengths or 500 meters (1640 feet), whichever is less, forward of the bow to 10° on either side irrespective of the vessel's draft, trim and deck cargo (e.g., containers). See Figure 2, "View of Sea Surface."

FIGURE 2
View of Sea Surface

4.2 Field of View Around Vessel

It should be possible to observe all objects necessary for navigation, such as ships and lighthouses, in any direction from inside the wheelhouse. There should be a field of view around the vessel of 360° for an observer moving within the wheelhouse. See Figure 3, "Field of View Around Vessel."

FIGURE 3
Field of View Around Vessel

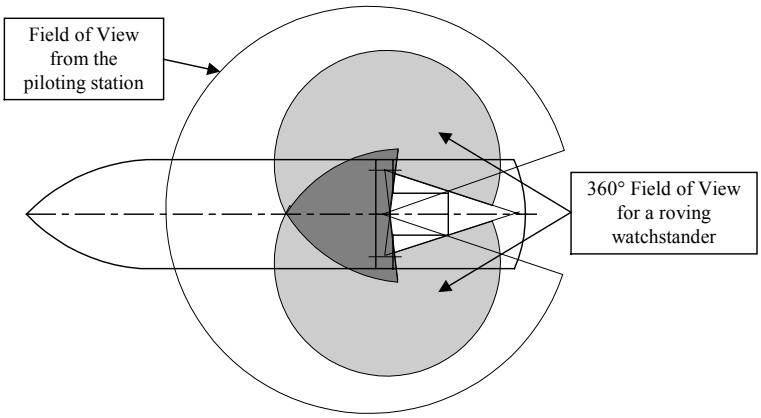

4.3 Navigating and Maneuvering Workstation Field of View

At the navigating and maneuvering workstation and at the conning position, the navigator's field of view should be sufficient to allow compliance with the International Regulations for Preventing Collisions at Sea Guidelines. See Figure 4, "Navigating, Maneuvering and Monitoring Workstations and Conning Position Field of View."

i) The forward horizontal field of view from the navigating and maneuvering workstation and from the conning position, should extend over an arc from 22.5° abaft the beam on one side of the vessel, forward through the bow centerline to 22.5° abaft the beam on the other side of the vessel at a minimum.

ii) From a monitoring workstation, the field of view should extend over an arc from 90° on one bow, through forward, to 22.5° abaft the beam on the other bow at a minimum.

iii) The field of view from a workstation on the bridge wing should extend over an arc from at least 45° on the opposite bow through dead ahead and then aft to 180° from dead ahead.

FIGURE 4
Navigating, Maneuvering and Monitoring Workstations and Conning Position Field of View

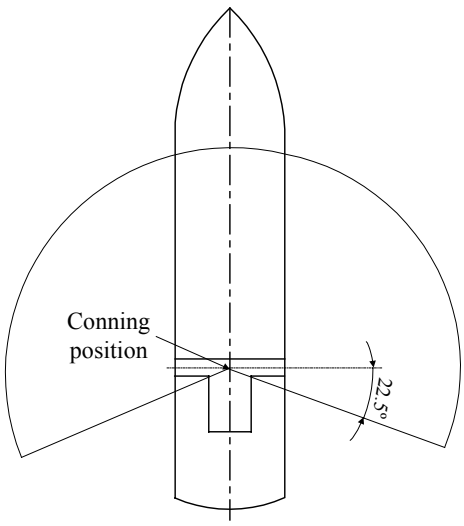

4.4 Bridge Wing Field of View

From each bridge wing, the horizontal field of view should extend over an arc of at least 225°, that is, at least 45° on the opposite bow through right ahead and then from right ahead to right astern through 180° on the same side of the vessel. See Figure 5, "Bridge Wing Field of View."

FIGURE 5
Bridge Wing Field of View

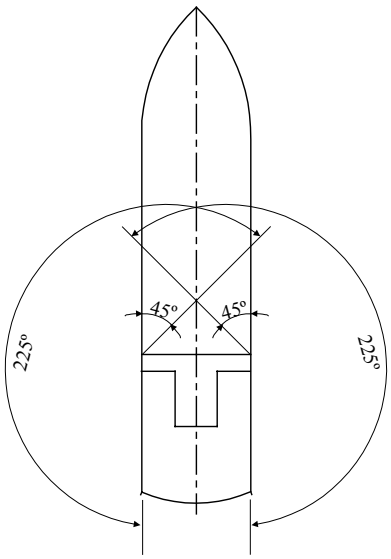

4.5 Main Steering Position Field of View

From the main steering position (i.e., workstation for manual steering) the horizontal field of view should extend over an arc from direct forward to at least 60° on each side of the vessel. See Figure 6, "Main Steering Position Field of View."

FIGURE 6
Main Steering Position Field of View

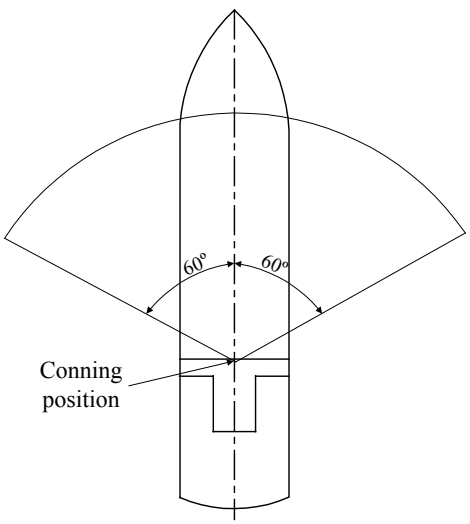

4.6 Blind Sectors

The safe look-out from the navigating and maneuvering workstation should not be influenced by blind sectors. Guidance regarding blind sectors includes:

i) Blind sectors caused by cargo, cargo gear or other objects forward of the beam that obstruct the view of the sea surface from the navigating and maneuvering workstations should not exceed 10°.

ii) The total arc of blind sectors should not exceed 20°.

iii) The clear sector between two blind sectors should be at least 5°.

iv) Over an arc from right ahead to at least 10° on each side, any individual blind sector should not exceed 5°.

4.7 View of the Vessel's Side

The vessel's side should be visible from the bridge wing. Bridge wings should be provided out to the maximum beam of the vessel. The view over the vessel's side should not be obstructed.

5 Overall Arrangement

The layout of the bridge, including location and layout of the individual workstations should ensure the required field of view for each function. Figure 7, "Typical Bridge Arrangement," presents a typical bridge layout.

FIGURE 7
Typical Bridge Arrangement

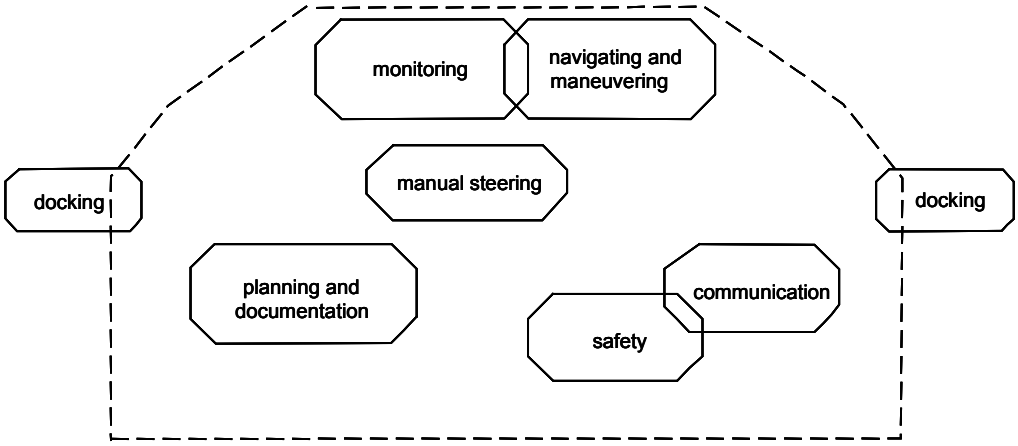

5.1 Vessel Control

The control of the vessel should be allocated to a certain area of the bridge where only instruments and controls necessary for navigating and maneuvering are located.

5.2 Navigating and Maneuvering Workstations

5.2.1 Location

The workstation for navigating and maneuvering should be laid out, if practicable, at the starboard side close to the centerline.

5.2.2 Design for Single or Dual Operations

The main workstations for navigating and maneuvering and the arrangement of instruments pertinent to these stations should be located sufficiently close together to enable a single navigator to cover operations. All necessary information should be provided to perform functions from one working position, but without being restricted to a specific location. The main workstations should be planned, designed and placed within an area spacious enough for no less than two crew members, but close enough to allow the stations to be operated by one person. The consoles, including a chart table if provided, should be positioned so that the instruments they contain are mounted facing a person who is looking forward.

5.2.3 Visibility of Area in Front of Bridge

The navigator should be able to watch the area immediately in front of the bridge superstructure from the wheelhouse. There should be a close approach access to at least one front window. If this requirement is met by combining "an adequate conning position" (see Subparagraph 3.6.1) and the required access specified in this clause, the width of the total access should be sufficient to accommodate two persons. [Note: This defined position should not affect the view of the helmsman to right ahead, since the helm is normally on the centerline.

5.3 Manual Steering Workstation

The preferred location for the manual steering workstation should be on the vessel's centerline. If the workstation for manual steering is located off the centerline, special steering references for use during day and night should be provided (e.g., sighting marks forward). If the view ahead is obstructed by large masts, cranes, etc., the steering station should be located enough of a distance to starboard of the centerline to obtain a clear view ahead.

5.4 Monitoring Workstation

The monitoring workstation should be laid out, if practicable, on the port side of the bridge close to the centerline.

5.5 Main Stations Communication

From a monitoring workstation, it should be possible to see and hear the people at the navigation, maneuvering and steering workstations. Where workstations are widely spread, a two-way communications system should be provided so that unhampered communications can be achieved under all operating conditions.

5.6 Bridge Wing Communication

A two-way internal communication system should always be provided between the navigating and maneuvering workstation and open bridge wings, particularly when the distance from the wing extremity to the wheelhouse centerline is greater than 10 meters (33 feet).

6 Traffic

6.1 Clear Route Across the Wheelhouse

A clear route across the wheelhouse should be provided. The width of the passageway should be at least 1200 mm (47 inches). Width of bridge wing doors should be at least 900 mm (36 inches).

6.2 Obstructions at the Point of Entry

There should be no obstructions between the points of entry to the bridge wings and wheelhouse from lower decks and the clear route across the bridge.

6.3 Adjacent Workstations

The distance between adjacent workstations should be sufficient to allow unobstructed passage for people not working at the stations. The free passage in passageways between different workstation areas should be at least 700 mm (28 inches). The workstation operating area should be part of the workstation and not part of the passageway.

6.4 Passageway Distance

The distance from the bridge front bulkhead or from any consoles or installations placed against the front bulkhead, to any consoles or installations placed away from the bridge front should be sufficient for two people to pass each other. The distance of a passageway between the front bulkhead and any consoles should preferably be at least 1000 mm (39 inches) and not less than 800 mm (31.5 inches).

6.5 Doors

All wheelhouse doors should be operable with one hand. Bridge wing doors should not be self-closing. Means should be provided to hold the bridge wing doors open.

6.6 Bridge Ceiling Clearance Height

The bridge ceiling clearance height in the wheelhouse should be designed with regard to the installation of overhead panels and instruments. The clearance height between the bridge deck surface covering and the underside of the deck head beams should be at least 2.25 meters (89 inches). The lower edge of deckhead-mounted equipment should be at least 2.1 meters (83 inches) above the deck in open areas, passageways and at standing workstations.

6.7 Main Workstations

Main workstations used for navigating, maneuvering, manual steering, voyage planning and communication should not cover a working area with a transverse axis longer than 15 meters (49 feet).

7 Sound Signals

7.1 Audibility of Sound Signals Inside the Bridge

Sound signals should be audible from the interior of the wheelhouse. It should be possible to open some windows in the wheelhouse in order to hear sound signals.

7.2 External Sound Signals

External sound signals from ships and fog signals that are audible on the open deck should also be audible inside the wheelhouse. A transmitting device should be provided to reproduce such signals inside the wheelhouse (recommended frequency range: 70 to 700 Hertz).

SECTION 5 Console and Workspace Design

1 Background

This Section specifies the design and use of consoles and workstations on bridges. The goal of this Section is to assist in the design of usable and efficient bridge elements. The guidelines contained in this Section should be used in conjunction with Appendix 1, "*Anthropometric Design Principles and Dimensions*" of the ABS *Guidance Notes on the Application of Ergonomics to Marine Systems*.

2 Terminology

Display: Means by which a device presents visual information to the navigator, including conventional instrumentation.

Console: Structural framework for the integration of devices, equipment and storage that together comprise a workstation.

Layout: Physical arrangement of the parts and components that make up a module or a unit of equipment.

3 Configuration

The following Paragraphs provide guidelines for the configuration of consoles exclusive of radar consoles.

3.1 Workstation Area Configuration

The workstations for navigating and maneuvering, monitoring and for the bridge wings should be planned, designed and placed within an area spacious enough for not less than two crew members, but close enough for the workstations to be operated by one person.

3.2 Single Watchstander Console

The console should be designed so that from the normal working position, the navigator can use all instruments and controls necessary for navigating and maneuvering. The width of consoles designed for single-person operation should not exceed 1600 mm (63 inches).

3.3 Design of Consoles for both Seated and Standing Operation

Figure 1, "Console Configuration and Dimensions for Standing Positions," and Figure 2, "Console Configuration and Dimensions for Sitting Positions," show the configuration and dimensions of consoles to be used by crewmembers in both standing and sitting positions. The console profile meets the anthropometric value of the 97.5 percentile (male) and the 2.5 percentile (female) of bridge personnel. (Data in the figures are based on Northern European and North American anthropometrics. For different populations or to establish limiting dimensions using different anthropometric percentiles, see Appendix 1 of the ABS *Guidance Notes on the Application of Ergonomics to Marine Systems*).

FIGURE 1
Console Configuration and Dimensions for Standing Positions

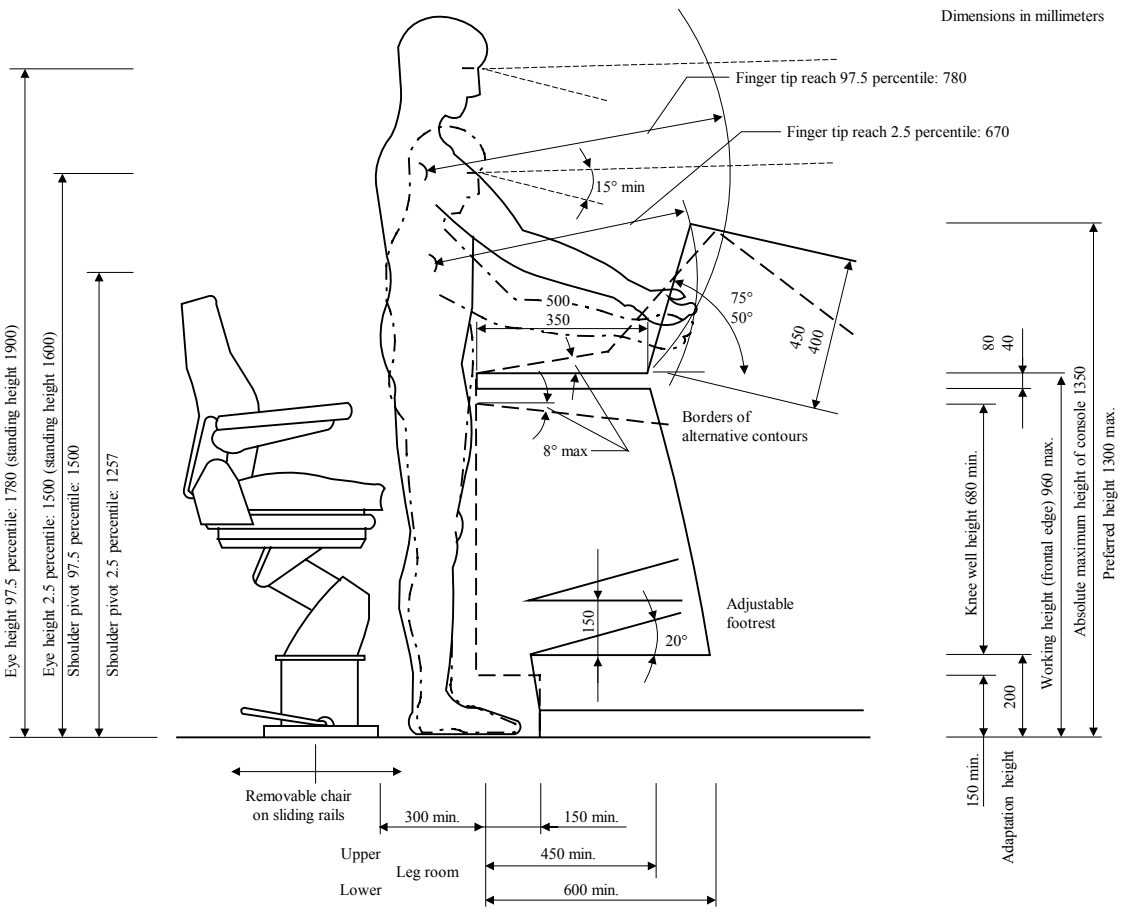

Note: The intention of this figure is only to demonstrate solutions based on ergonomic principles.

3.4 Console Left-to-Right Viewing Angle

The console should be designed so that from the normal working position, the total required left-to-right viewing angle should not exceed 190°. This angle should be reduced whenever possible through appropriate control-display layout. (See also Section 6, Figure 1, "Immediate and Preferred Viewing Areas."

3.5 Console Height

The top of the consoles should not exceed a height of 1200 mm (47 inches).

3.6 Console Leg Room

The upper leg room of the console should have a minimum of 450 mm (18 inches) in depth and the lower leg room a minimum of 600 mm (25 inches) in depth.

FIGURE 2
Console Configuration and Dimensions for Sitting Positions

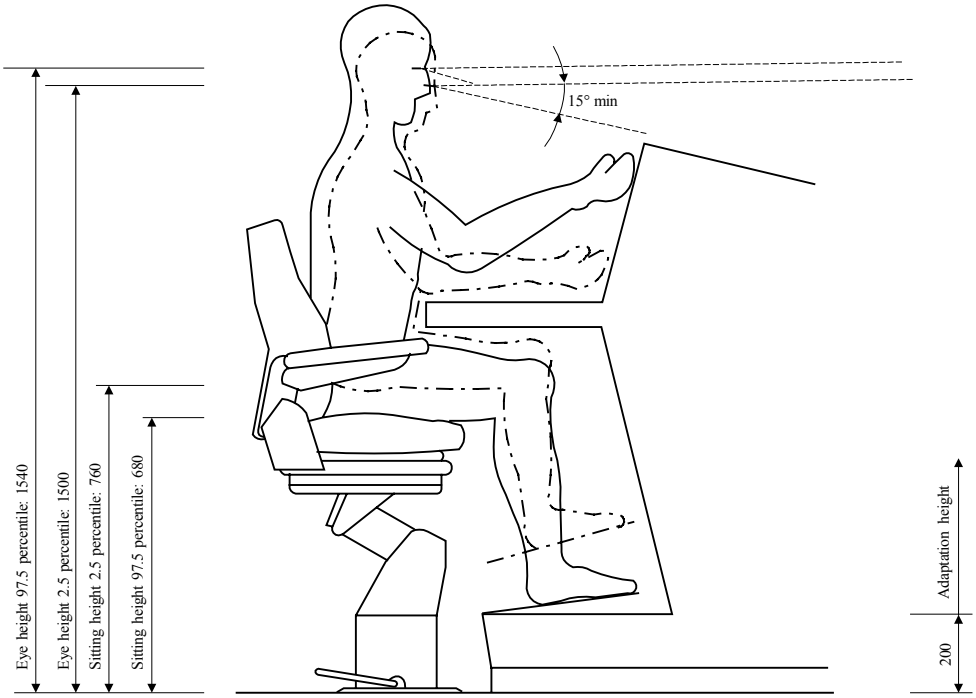

Notes:

1 The intention of this figure is only to demonstrate solutions based on ergonomic principles.

2 Preferred knee well width for sitting position is 600 mm, minimum 500 mm.

3 The height measurements of consoles for only a sitting position shall be reduced by the adaptation height of 200 mm.

3.7 Chart Table Dimensions

The chart table should be large enough to accommodate all chart sizes normally used internationally for maritime traffic. It should also have facilities for lighting the chart.

Chart table dimensions should be:

i) Width: not less than 1200 mm (47 inches)

ii) Depth: not less than 850 mm (33.5 inches)

iii) Height: not less than 900 mm (35.5 inches) and not more than 1000 mm (39 inches).

The chart table should have facilities to accommodate charts larger than the table depth, for example a 100 mm (0.4 inch) slit along front and back edges of the chart table surface.

3.8 Chair Design

Chairs at workstations designed for a sitting position should be capable of rotating with the footrest being arrested, adjustable in height and capable of being arrested on the floor. Chairs should be capable of being moved out of the operating area.

4 Location of Instruments and Equipment

The guidance in this Subsection is not intended to prevent the use of new control or display techniques, provided the techniques provide equal or better human performance to those included in these Guidance Notes.

4.1 Location Above Front Window

Certain instruments displaying information to more than one workstation may be located above the front windows, if dimensions allow. Such instruments or displays are vessel's heading, wind speed and relative direction, water depth, vessel's speed (e.g., from GPS), rate of turn, rudder angle, propeller revolutions per minute, propeller pitch and time.

4.2 Instruments and Equipment at Navigating and Maneuvering Workstations

Each workstation should be capable of presenting basic information and should contain the equipment required to enable the navigator to safely carry out the relevant functions and tasks. Ergonomic principles and views of experienced, practicing bridge persons on watch duty should be taken into consideration in the design of workstations.

The information system and control possibilities should be made available to the workstations for navigating and maneuvering in such a way that the tasks at each of these stations can be efficiently carried out. The basic categories of instrument information and equipment for the functions to be performed are described in the following Subparagraphs.

4.2.1 Navigational Functions

Navigation functions include facilities for internal and external communications directly related to navigation of the vessel. External communications include conversing with other vessels in traffic situations, port operations services and vessel movement services (defined in the radio regulations). The navigation functions, controls and displays should be designed to enable bridge personnel to:

i) Determine and plot the vessel's position, course, track and speed

ii) Alter course

iii) Effect internal and external communication related to navigation

iv) Monitor time, course, speed and track, propeller revolutions, pitch indication and rudder order and angle.

4.2.2 Maneuvering Functions

Maneuvering controls and displays should be designed to enable bridge personnel to:

i) Analyze the traffic situation

ii) Decide on collision avoidance

iii) Alter course

iv) Change speed

v) Effect internal and external communication related to maneuvering

vi) Operate docking aid systems

vii) Monitor time, course, speed and track, propeller revolutions, pitch indicator and rudder order and angle.

4.3 Other Instrument and Equipment Locations

Instruments and equipment should be located to meet bridge personnel needs at each workstation. Typical groupings are as follows:

4.3.1 Navigation Workstation

The navigation workstation should include the following:

i) Navigation radar display

ii) Position-fixing systems

iii) Depth indicator

iv) Chart table with instruments.

4.3.2 Maneuvering Workstation

The maneuvering workstation, used for collision avoidance/docking, should include the following:

i) Radar display

ii) Automatic radar plotting aid (ARPA)

iii) Engine and thruster controls or telegraphs

iv) Rudder angle indicator

v) Propeller revolution indicator(s)

vi) Pitch indicator

vii) Speed and distance indicator.

4.3.3 Instruments and Equipment of Common Interest

Instruments and equipment of common interest to both the stations for navigation and maneuvering should be located to be visually accessible to both locations without requiring personnel to lean, bend or walk to see the instruments from either position. Such instruments and equipment, if fitted, should include:

- Manual steering device
- Automatic steering device
- Rudder angle indicator
- Gyro repeater
- Intercommunication systems
- Emergency stop controls
- Rate of turn indicator
- Searchlight controls
- Magnetic compass display
- Clock
- Gyro repeater
- Steering control
- Gyro repeater (bearing)
- Speed and distance indicator
- VHF radiotelephone
- Alarm reset control
- Whistle control
- Morse light keys
- Window wiper and washer controls
- GMDSS

Note: Depending on the level of automation, integration of instruments and new methods of display, the workstations for navigation and maneuvering may be designed as one combined station.

4.3.4 Manual Steering Workstation

The manual steering workstation should include the following:

- Manual steering device
- Rudder angle indicator
- Magnetic compass display
- Talkback to bridge wings
- Gyro repeater
- Rate of turn indicator
- Course indicator

4.3.5 Bridge Wing Workstations

The bridge wing workstations should include the following:

- Engine control
- Rudder control
- Gyro repeater
- Sea bottom tracking speed indicator
- Whistle control
- Thruster control
- Rudder angle indicator
- Rate of turn indicator
- Communication (external and internal)
- Morse light keys

4.3.6 Monitoring Workstation

The monitoring workstation should include the following:

- Radar
- Intercommunication Systems
- Speed and distance indicator
- Propeller revolution indicator(s)
- Emergency stop controls
- Rate of turn indicator
- VHF radiotelephone
- Gyro repeater
- Rudder angle indicator
- Alarms
- Monitoring systems

4.4 Mounting

Instruments, panels and controls should be permanently mounted in consoles or at other appropriate places, taking into account operation, maintenance and environmental conditions.

4.5 Portable Items

Portable items, such as safety equipment, tools, lights and pencils should be stored at appropriate places, specially designed wherever necessary (e.g., in recesses to avoid rolling or falling in heavy seas).

5 Communication Devices

5.1 Internal and External Communications

Where communications equipment for internal or external communications is installed on the bridge, it should be installed and used such that it should not interfere with the vessel's navigation. Such equipment, which may be for distress and safety communications or for general communications, is referred to as "additional communications equipment".

5.2 Additional Communications Equipment

Additional communications equipment fitted on the vessel's bridge should be fitted in a communications workstation. Those parts of such communications equipment not fitted with operating controls and displays and that, by reason of their size or for other practical considerations, cannot be mounted in this workstation may be mounted elsewhere in the vessel.

5.2.1 Operation

It should be possible for a navigator to operate the communications equipment situated on the bridge. The communications workstation may be situated adjacent to the navigation workstation. Alternately, the navigation workstation may be fitted with facilities for remote control of the additional communications equipment, so that the navigator may use the equipment in any normal working position.

5.2.2 Navigator Unavailable

Communications equipment on the bridge should be arranged so that whenever the situation does not permit the navigator to operate the additional communications equipment, the navigator can be relieved of this task. The communications workstation or the navigation workstation, if remote control is installed, should include facilities for routing or instantly transferring communications to a position elsewhere in the vessel. Alternately, the navigator should be able to call another person to the communications workstation, whenever the navigator is unable to take care of such communications due to navigational duties.

5.3 Radiotelephone Public Correspondence

It should be possible to perform radiotelephone public correspondence communications without these communications being audible to the navigator. If communications from the communications workstation might be audible to the navigator, then another place or room fulfilling this requirement should be available for public correspondence.

5.4 Written Communications Reception

Equipment on the bridge for reception of written communications (e.g., telex, telefax) should be so arranged that only persons authorized for this task would be able to read such communications.

This Page Intentionally Left Blank

SECTION 6 Detailed Design

1 Background

This Section specifies the design of displays, controls and information on the bridge. The goal of this Section is to aid in the successful design, organization and presentation of displays and the devices that control them. The guidelines contained in this Section should be used in conjunction with the ABS *Guidance Notes on the Application of Ergonomics to Marine Systems*.

2 Terminology

Ascenders/Descenders: The point size of a given font is measured from the top of the font's ascenders (i.e., the top of the letter) to the bottom of its descenders (e.g., the length of the "tail" of the letter "p"). The ascender is the measurement from the top of the lowercase letter to the top of the uppercase letter. The descender is measured from the bottom of the uppercase letter to the bottom of the lowercase letter.

Aspect Ratio: The ratio of the font size (i.e., measurement from the baseline to the top of the uppercase letters) to the x-height (i.e., measurement from the baseline to the top of the lowercase letters.)

Control: A device bridge personnel use to input a signal to a display or to change the operating status of the equipment or system.

Icon: A graphical representation of an object or function. A graphic symbol.

Parallax: An apparent change in the direction of an object, caused by a change in observational position that provides a new line of sight.

Stroke Width: The width of the line that defines the font.

Visual Display: A device that provides readings, status or conditions of machinery, equipment or system operating parameters.

3 Display Arrangement

3.1 Immediate Field of View

The most important and/or frequently used displays should be located within the watchstander's immediate field of view, defined as the viewing area with eye rotation only. See Figure 1, "Immediate and Preferred Viewing Areas."

3.2 Preferred Viewing Area

The preferred viewing area should be reserved exclusively for the most important and/or frequently used displays.

FIGURE 1
Immediate and Preferred Viewing Areas

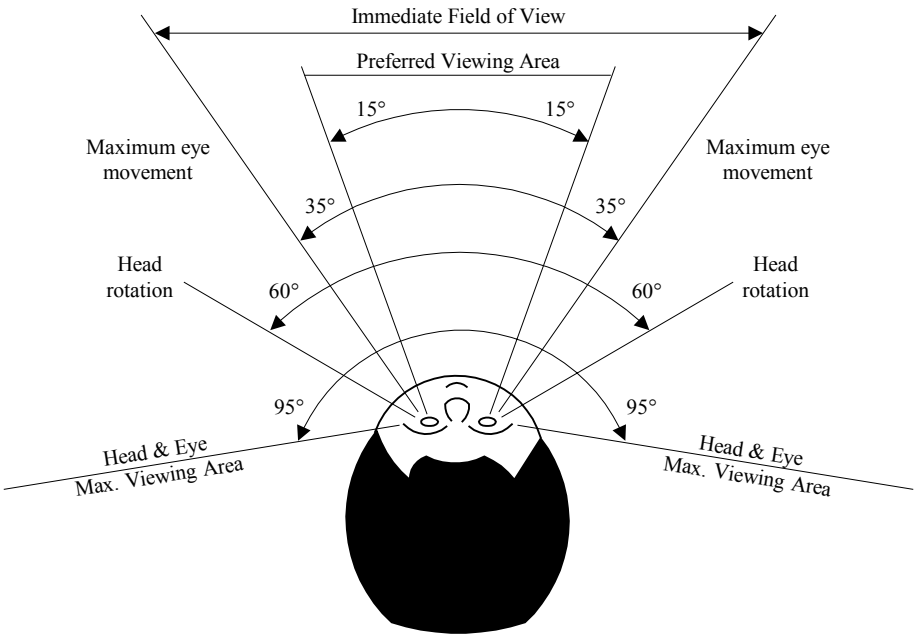

4 Information Display

The guidance in this Subsection is largely to the design of computer displays, consoles and display groups.

4.1 Lack of Ambiguity

Display indicators should clearly and unambiguously direct and guide the appropriate control response.

4.2 Digital Displays

4.2.1 Use of Digital Displays

Digital displays should be used for the presentation of quantitative data when exact values are required and when continuous trend or rate of change information is not required.

4.2.2 Inappropriate Use of a Digital Readout

A digital readout should not be used when the information changes with a frequency of more than 0.5 Hertz; a higher frequency may be used when the information perception from other displays is not disturbed.

4.3 Update of Information

The displayed information should be continuously and automatically updated.

4.4 Information Duration

For signals or displays that frequently or consistently change their outputs, the information displayed should have durations of sufficient length to be reliably detected under the expected workload and operational environment.

4.5 Display Simplicity

Displays should present the simplest information consistent with their function. Information irrelevant to the task should not be displayed. Extraneous text and graphics should not be present.

4.6 Tailoring the Display to Bridge Personnel Needs

Displayed data should be tailored to bridge personnel needs, providing only necessary and immediately usable data for any task.

4.7 Display Fields for the Display of Important Information

The display fields for the presentation of the most important and/or frequently used information should be assigned exclusively to that information and should not be used to display any other information.

4.8 Graphic Display Enhancement

When precise reading of a graphic display is required, the display should be annotated with actual data values to supplement their graphic representation.

4.9 Indication of Scale

The scale of maps and charts (data) shown on the display should always be indicated.

4.10 Aiding Distance Judgments

When bridge personnel must judge distances accurately on a map or other graphic display, computer aids should be provided for that judgment.

4.11 Multifunction Displays

Multifunction displays, if used, should be color displays.

5 Organization of Visual Information

The guidance in this Subsection is largely to the design of computer displays, consoles and display groups.

5.1 Consistent Screen Organization

Display screen organization should be consistent with respect to the location of various system functions (such as a data display zone, control zone or message zone) from one display to another.

5.2 Consistent Presentation

The arrangement and presentation of identical visual information should be consistent.

5.3 Grouping of Information on a Display

Information on a display should be grouped according to obvious principles (e.g., by task, system, function, sequence, etc., based upon requirements in performance of the ongoing task).

5.4 Demarcation of Information Groups

Information groups should be visually distinct, for example, separated by blanks, lines, color coding or other means.

5.5 High Priority Displays

Where two bridge personnel must use the same display and the displays have high priority, duplicate sets should be provided, whenever there is adequate space. Otherwise, displays should be centered between bridge personnel. Alternatively, they can be placed so that both can easily monitor them (e.g., above the forward window).

5.6 Centering of Shared Displays

Where two bridge personnel must use the same display and secondary displays must be shared, they should be centered between bridge personnel. If the displays are more important to one watchstander than to any others, they should be placed nearest personnel having the principal requirements for using them. Alternatively, they can be placed so that both can easily monitor them (e.g., above the forward window).

5.7 Instrumentation Grouping

Instruments should be logically grouped according to their functions, such as:

i) Navigating

ii) Maneuvering

iii) Communication.

6 Display Design

6.1 Font Style

A clearly legible font should be used. Fonts should have true ascenders and descenders, uniform stroke width and uniform aspect ratio.

6.2 Meaningful Abbreviations

When abbreviations or acronyms are used, they should be meaningful, in common usage and kept to a minimum.

6.3 Units of Measurement

The units of measurement (volts, pounds of pressure, inches, etc.) should be labeled.

6.4 Icons

6.4.1 Appropriate Use of Icons

Icons should be designed to look like the objects, processes or operations they represent, by use of literal, functional or operational representations.

6.4.2 Representation and Discrimination

Each icon or symbol should represent only one object or function and should be easily discriminable from all other icons and symbols.

6.4.3 Size

Icons and symbols should be large enough for bridge personnel to perceive the representation and discriminate it from other icons and symbols.

6.4.4 Highlighting

An icon or symbol that bridge personnel have selected should be highlighted.

6.5 Scaling in Standard Intervals

Scales should have graduations at a standard interval of 1, 2, 5 or 10 (or multiples of 10) for labeled divisions, as appropriate. Intervening tick marks to aid visual interpolation should be consistent with the labeled scale interval.

6.6 Expansion of Graphic Displays

When a graphic display has been expanded from its normal coverage, some scale indicator of the expansion factor should be provided.

6.7 Unobtrusive Grids

When grid lines are displayed, they should be unobtrusive and not obscure data elements (e.g., curves and plotted points).

7 Control Design

7.1 Control Placement

Controls requiring frequent adjustments or accurate settings should not be placed more than 675 mm (26.5 inches) from the front edge of the console.

7.2 Control Positioning for Simultaneous Operation

Controls should be located so that simultaneous operation of two controls will not necessitate a crossing or interchanging of hands.

7.3 Location of Primary and Frequently Used Controls

The most important and frequently used controls should have the most favorable position with respect to ease of reaching and grasping (particularly rotary controls and those requiring fine settings). Keys for emergency functions should have a prominent position and be characteristically marked.

7.4 Consistent Arrangement

The arrangement of functionally similar or identical controls should be consistent from workstation to workstation and panel to panel throughout the bridge.

7.5 Spacing Between Controls

Appropriate spacing between the controls should be provided.

7.6 Movement of Controls

Movement of a control forward, clockwise to the right or up, should:

i) Turn the equipment or component "**ON**"

ii) Cause the quantity to increase

iii) Move the equipment or component forward, clockwise, to the right or up.

7.7 Corresponding Movements

Controls should be selected so that the direction of movement of the control will be consistent with the related movement of an equipment component or vessel. For example, pushing a propulsion speed control lever forward should cause the vessel speed to increase. The direction of motion of operating elements for maneuvering equipment should correspond with the direction of the effect on the vessel.

7.8 Return to Navigation Monitoring Mode

When a single device is used simultaneously for voyage planning and navigation monitoring it should be possible to revert to the monitoring mode with a single action.

7.9 Minimal Actions

Control actions should be simple, particularly for real-time tasks requiring fast response. Control logic should permit completion of a transaction sequence with the minimum number of actions.

7.10 Consistency of Control Actions

The same functions should be activated on devices by the same control actions, as far as practicable.

7.11 Feedback

Visual, auditory or mechanical feedback should be provided to indicate that a controller input has been registered.

7.12 Ease of Operation of Controls

Controls should be easy to identify and operate.

7.13 Display Obscuration by Operation of Controls

The operation of a control should not obscure displays where observation of these displays is necessary to allow control adjustments to be made.

7.14 Controls for Important Functions

7.14.1 Accessibility of Controls for Important Functions

A dedicated control should be provided for important and/or frequently used functions and that control should be easily visible and accessible to bridge personnel from the normal working position (e.g., a single variable function key should not be used to control several important or frequently performed functions).

7.14.2 Operation of Controls for Important Functions

The controls for the most important and/or frequently used functions should require only a single actuation to accomplish their function.

7.14.3 Assignment of Controls of Important Functions

The controls for the most important and/or frequently used functions should be assigned to only one function.

7.15 Prevention of Accidental Input or Actuation

Control locations and physical arrangements should be designed to prevent the accidental manipulation of those controls that could result in changes to the status of the system, the system functions, components or data, for example, loss of power. One way to accomplish this is through physical protection and/or placement on the equipment.

7.16 Control Purpose

The purpose of each control should either be clearly illustrated by symbols where standard symbols have been internationally adopted or labeled.

7.17 Simple Controls and Indicators

Controls or combined controls/indicators should be visually and tactually distinguishable from elements that only indicate. Rectangular buttons should be used for control elements and round lights for indicator elements.

7.18 Operation of Controls

The shape of a control should provide a visual indication of the method of operation. For example, controls where there are two or three discrete positions should be toggles or levers. Rotary continuous-position controls (i.e., rheostats) should have knobs or wheels, except the steering control.

8 Control and Display Integration

8.1 Logical Arrangement

Controls and displays should be fitted in a logical arrangement and combined into functional groups.

8.2 Location Consistency

Location of recurring functional groups and individual items should be similar from console to console.

8.3 Visual Information for More than One Watchstander

Displays providing visual information to more than one person on duty should be located for easy viewing by all bridge personnel concurrently. If this is not possible, the displays should be duplicated (e.g., repeaters).

8.4 Control and Display Location

Controls and their associated displays should be located so that the information on the displays can be easily read during the operation of the controls.

8.5 Simultaneous Use

A visual display that must be monitored concurrently with manipulation of a related control should be located so that bridge personnel are not required to observe the display from an extreme visual angle that introduces the possibility of parallax error.

8.6 Control/Indicator Distinctiveness

Controls or combined controls/indicators should be visually and tactually distinguishable from elements that only indicate.

8.7 Readability of Instruments

i) Instruments should be designed to permit easy and correct reading by day and by night (e.g., that rheostatic or other means are used to brighten or darken displays in accordance with the environmental light conditions).

ii) The requirements of IMO Resolution A.574 (XIV) apply to the design of electronic navigational aids.

iii) A digital readout should not be used where the reading changes rapidly.

iv) For an index moving relative to a circular scale, the index should move clockwise (or the scales move counterclockwise) for increasing readings.

v) For an index moving relative to a linear scale, the index should be horizontal or vertical and the pointer should move to the right or upward for increasing readings.

Note: There may be special cases where these guidelines do not apply, for example, where an instrument reading may be positive or negative or where depth is indicated.

8.8 Instrument Placement

Each instrument should be placed with its face approximately perpendicular to line of sight.

8.9 Glare Minimization

Instruments should be designed and fitted to minimize glare or reflection. Instruments should not be obscured by strong light. All instruments should be placed in positions relative to bridge personnel, considering the surrounding light sources. Where a transparent cover is fitted over an instrument or instruments, it should be designed to minimize reflections.

8.10 Principal Maneuvering Instruments

8.10.1 Readability from Main Maneuvering Workstation

The principal maneuvering instruments should be readable from the main maneuvering workstation.

8.10.2 Reading Distance

Instruments meant to be operated or positioned in connection with controls should be readable from a distance of at least 1000 mm (39.5 inches). Any other instruments should be readable from a distance of at least 2000 mm (79 inches).

8.10.3 Character Height

Character height in millimeters should be not less than three and a half times the reading distance in meters. With the exception of the number 1 (one) and the letters i, I and l, character width should be 0.7 times the character height, for example:

i) Character height for reading distance of 2 meters: $2 \times 3.5 = 7$ mm

ii) Character width for letter height of 7 mm: $7 \times 0.7 \cong 5$ mm

iii) Resulting minimum character size: 7 mm (0.28 inches) height by 5 mm. (0.2 inches) width

8.11 Contrast Ratio

All information should be presented on a background of high contrast, emitting as little light as possible by night. All bridge instruments should be designed to show a light text on a dark non-reflecting background at night. The contrast ratio should be within 1:3 and 1:10.

8.12 Character Type

Instrument character type should be of simple, clear-cut design. Internationally used and recommended character type is Helvetica medium. However, light emitting diode text matrices are acceptable.

9 Control and Display Failure Prevention

9.1 Loss of Power

Following a loss of power that has lasted for 30 seconds or less, all primary functions should be readily reinstated.

Following a loss of power that has lasted for more than 30 seconds, as many as practical primary functions should be readily reinstated.

9.2 Computer Network Failure

Where computerized equipment is interconnected through a computer network, failure of the network should not prevent individual equipment from performing its individual functions.

This Page Intentionally Left Blank

SECTION 7 Design of Alarms and Warnings

1 Background

This Section specifies the design and use of the alarms and warnings present on the bridge. These guidelines should be used in conjunction with the relevant portions of the ABS *Guidance Notes on the Application of Ergonomics to Marine Systems*. See also additional guidance in Section 2, Subparagraphs 3.4.8 through 3.4.11 of these Guidance Notes.

2 Terminology

Alarm: A visual and/or audible signal indicating an abnormal situation.

Warning: A cautionary or deterrent indication of an impending abnormal situation.

3 General

IMO resolution A.830(19), *Code on Alarms and Indicators*, (1995) presents "general design guidance... to promote uniformity of type, location and priority..." for alarms and indicators. Please refer to that document for tables of required alarms and indicators for ships' bridges and machinery spaces of different functionality, machinery and ship type.

3.1 Bridge Control System Failure

In the event of a failure of the bridge control system:

i) An alarm should notify bridge personnel.

ii) The speed and direction of the propeller thrust is to be maintained until local control is in operation, unless this is considered impracticable.

iii) Lack of power (electric, pneumatic or hydraulic) should not lead to major and sudden change in propulsion power or direction of propeller rotation.

3.2 Alarm Acknowledgement

A method of acknowledging all alarms (silence audible alarms and set visual alarms to steady state), including the indication of the source of the alarm, should be provided at the navigating and maneuvering workstation. This will help ensure that bridge personnel avoid distraction by alarms that require attention but have no direct influence on the safe navigation of the vessel and that do not require immediate action to restore or maintain safe navigation.

3.3 Fire and Emergency Alarms

The alarm indicators and controls of the fire alarm and emergency alarm should be located at the safety workstation.

3.4 Failure or Reduction of Power Supply

Alarms should be provided to indicate failure or reduction in the power supply that could influence the safe operation of the equipment.

3.5 Sensor Input Failure or Absence

Alarms should be provided to indicate sensor input failure or absence.

3.6 Alarm Status

Alarm systems should clearly distinguish between alarm, acknowledged alarm and no alarm (normal condition).

3.7 Continuation of Alarms

Alarms should continue until they are acknowledged.

3.8 Cancellation of Alarms

Alarms and acknowledged alarms should be capable of being cancelled only if the alarm condition is rectified. This cancellation should be possible only at the individual equipment.

3.9 Alarm Minimization

The number of alarms should be minimized.

3.10 Alarm Testing

Bridge personnel should be able to functionally test alarms.

3.11 Alarm Power Supply

Required alarm systems should be continuously powered and should have an automatic changeover to a standby power supply in case of loss of normal power supply.

3.12 Indication of Alarms

Alarms should be indicated in order of sequence and provided with aids for decision-making. An explanation or justification of an alarm should be available (on request).

3.13 Presentation of Alarms

The presentation of alarms should be clear, distinctive, unambiguous and consistent.

3.14 Modes of Alarms

All required alarms should be presented through both visual and auditory means.

3.15 Distribution of Power Supply Failure Alarm

Failure of the main power supply to the distribution panels should initiate an audible and visual alarm.

3.16 Location of Alarms

Alarms are to be provided at the main control station, engineer accommodation area and on the bridge. Group alarms may be arranged on the bridge to indicate machinery faults. Alarms associated with faults requiring speed reduction or the automatic shut down of propulsion machinery should be separately identified.

4 Alarm/Warning Transfer System

4.1 Alarms Requiring Response

Any alarm/warning that requires bridge personnel response that is not acknowledged within 30 seconds should be automatically transferred to the Master and if the Master deems it necessary, to the selected back-up navigator and to the public rooms. Such transfer should be carried out as required by Paragraph 4.2 and Subparagraph 4.4.2, where applicable.

4.2 Fixed Location for Transfer

The alarm and warning transfer should be operated from a fixed installation.

4.3 Alarm Acknowledgement on Bridge

Acknowledgment of alarms/warnings should be possible only from the bridge.

4.4 Two-Way Speech Capability During Alarm Transfer

4.4 1 Officer of the Watch

At all times, including during blackout, the Officer of the Watch should have access to facilities enabling two-way speech communication with another qualified officer. The bridge is to have priority over the communication system.

Note: The automatic telephone network is acceptable for this purpose, provided that it is automatically supplied with emergency or back-up battery power during blackout situations and that it is available in the locations specified in Paragraph 4.1.

4.4.2 Backup Navigator

If, depending on the shipboard work organization, the Back-up Navigator may attend locations not connected to the fixed installation(s) described in Paragraph 4.1, the Back-up Navigator should be provided with a wireless portable device enabling both the alarm/warning transfer and two-way speech communication with the Officer of the Watch.

5 Alarms Concerning Navigation

5.1 Alarm System

The detection system should initiate audible and visual alarms distinct in both respects from the alarms of any other system not indicating fire, in sufficient places to ensure that the alarms are heard and observed on the navigating bridge and by a responsible engineering officer. When the navigation bridge is unmanned (e.g., when not underway or due to watchstander incapacitation) the alarm should sound in a place where a responsible member of the crew is on duty. Alarms not acknowledged within a specified time (nominally 30 seconds) on the bridge should sound in a place where a responsible member of the crew is on duty (e.g., cargo control room, Master's office, ship's office, engine control room).

5.2 Planned Route Deviation

The navigator should be given an alarm when there is deviation from the planned route. This alarm should be adjustable with respect to the time and to the danger of grounding.

5.3 Water Depth

An alarm should be initiated when the water depth beneath the vessel is less than a predetermined value.

5.4 Hydraulic Locking

Where a single failure can lead to hydraulic lock and loss of steering, an audible and visual alarm, which identifies the failed system, should be provided on the navigation bridge. This alarm should be activated whenever:

i) Position of the variable displacement pump control system does not correspond with given orders

ii) Incorrect position of 3-way full flow valve or similar device in a constant-delivery pump system is detected.

6 Visual Alarms

6.1 Discrimination of Visual Alarms

Visual alarms should clearly differ from routine information on displays.

6.2 Presentation of Visual Alarms

Visual alarms should flash after onset. Flashing display should change to steady display upon acknowledgement.

6.3 Presentation of Normal Conditions (No Alarm)

Alarm indicators should be designed to show no light or should not be visible on displays in normal conditions (i.e., no alarm).

6.4 Flash Rate

Flashing visual alarms should be illuminated for at least 50 percent of the cycle and have a pulse frequency in the range of 0.5 Hertz to 1.5 Hertz.

6.5 Lamp Testing

Means should be provided to test the lamps.

6.6 Visual Alarms and Night Vision

6.6.1 Noninterference with Night Vision

Visual alarms on the navigation bridge should not interfere with night vision.

6.6.2 Red Lighting for Alarm Indicators

Alarm indicator lights should be equipped with red lights of 620 nanometer (nm) or higher wavelength. Low level white lights are also acceptable (See the ABS *Guide for Crew Habitability on Ships* and the ABS *Guide for Crew Habitability on Offshore Installations*).

7 Audible Alarms

7.1 Use of Audible Alarms

Audible alarms should be used simultaneously with visual alarms.

7.2 Cessation of Audible Alarms

Audible alarms should silence when acknowledged.

7.3 Differentiation of Audible Alarms from Other Signals

Audible alarms should be differentiated from routine signals, such as bells, buzzers and normal operation noises.

7.4 Audible Alarm Sound Characteristics

Under normal working conditions, the alarm signals should be heard properly inside the wheelhouse and outside on the bridge wings.

7.4.1 Sound Pressure

Audible alarm sound pressure, one meter (39 inches) from the source should be at least 75 dB(A) and at least 10 dB(A), or preferably 20 dB(A) above ambient noise levels existing during normal operations. Audible alarm sound pressures in a space should not exceed 115 dB(A).

7.4.2 Sound Frequency

With the exception of bells, audible alarms should have a signal frequency between 200 Hertz and 2500 Hertz, with the preferable range between 500 Hertz and 1500 Hertz.

This Page Intentionally Left Blank

SECTION 8 Procedures, Codes and Job Aids

1 Background

The following Section discusses design considerations associated with providing bridge personnel with visual and audible information that will support successful completion of tasks on a navigation bridge. This includes coding, procedures and other job aids.

2 Terminology

CIE: Commission Internationale de l'Eclairage (CIE) is an international organization that focuses on lighting.

Coding: Coding refers to a system of sensory stimuli used to represent specific information. There are a number of mechanisms for coding information. These include, but are not limited to:

i) Audible through pitch, frequency and modulation

ii) Visual through color and shape

iii) Tactile through shape and texture.

Labels: Within the context of these Guidance Notes, the terms "labels" and "labeling" refer to the descriptors used to identify controls, displays and other components on the navigation bridge and not to the internal components of displays such as meter scales or fields in a computer display.

Synthesized Speech: Machine-generated speech that is produced by a voice synthesizer.

3 Coding

The following Paragraphs provide guidance on the use of coding to support navigation bridge tasks.

3.1 General

3.1.1 Consistency

Within any coding context (e.g., colors used on alarms, piping diagrams or simple indicator lights) coding mechanisms should be consistently applied, using the same shapes, colors or tones to convey the same meaning from console to console and space to space.

3.1.2 Coding Simplicity

Codes should be simple and easily recognized by limiting the number of coded levels used (e.g., use no more than seven different colors to code alarms). Bridge personnel should be able to easily sense and discriminate the code and recognize its meaning.

3.1 3 Flash Coding

Red flash coding should be reserved for alarms.

3.2 Color Coding

3.2.1 General

Color coding of indicator lights and lamps should be in accordance with Table 1, "Color Coding Recommendations for Displays." Note that blue light is typically used for advisory indication (e.g., pumping system ready to operate) and white light indicates confirmation or selection (e.g., which pumps of a fire main in standby are online).

TABLE 1
Color Coding Recommendations for Displays

Color	*Meaning*	*Explanation*	*Typical Applications*
Red	Danger or Alarm	Warning of potential danger or a situation that requires immediate action.	Failure of pressure in a lubricating system. Temperature outside specified limits. Activation of a safety system.
Amber/ Yellow	Caution	Change or impending change of conditions.	Pressure or temperature different from normal level. Run/running out of time – where time is limited.
Green	Safety	Indication of a safe situation or authorized to proceed	Cooling liquid circulating. Automatic boiler control in operation. Machine ready to be started.
Blue	Instruction/ Information	Any meaning not covered by the above colors.	Motor ready to start, pump in standby re-circulation, Ro-Ro Ramps deployed
White	No specific meaning assigned (Neutral)	Any meaning. May be used where doubt exists about the application of red, green or yellow/amber. Often used for confirmation.	Telephone calls. Synchronizing lamps (for A/C bus alignment).

3.2.2 Recommended Color Coding for Controls

Table 2, "Color Coding Recommendations for Controls," provides recommended color coding for controls.

TABLE 2
Color Coding Recommendations for Controls

Color	*Meaning*	*Typical Applications*
Red	Action in case of emergency. Stop or off.	Emergency stop. Fire Fighting. General stop of one or more motors or open a switching device.
Amber/Yellow	Intervention	Intervention to suppress abnormal conditions or avoid unwanted changes.
Green	Start or on	Start one or more motors or close a switching device.
Blue/Black/ Grey/White	Any meaning not covered by the above colors.	Selection of station for control or standby navigator/engineer.

3.2.3 Color Coding Compatibility with Ambient Illumination

Color coding should be compatible with ambient illumination. Special consideration should be given to cases where low-level red illumination is used, since red backlit displays may be difficult to discern when externally illuminated by red light.

3.2.4 Redundant Color Coding

Color coding should be redundant with some other display feature. Add color coding after displays have already been designed as effectively as possible in a monochrome format.

3.2.5 Easily Discriminable Colors

When selecting colors for coding discrete categories of data, those colors should be easily discriminable.

3.2.6 Minimum Color Differences

When color coding is used for discriminability or conspicuity of displayed information, all colors in the set should be clearly distinct from each other.

3.3 Shape Coding

3.3.1 Establishing Standards for Shape Coding

When shape coding is used, codes should be based on established standards or conventional meanings. Where used, shape codes should be applied consistently.

3.4 Audible Coding

3.4.1 Number of Audible Signals

To avoid confusion, the number of equipment-based audible signals should be minimized, ideally to the following:

i) Communications call

ii) Watch safety system pre-warning

iii) Navigation alarm/warning

iv) Machinery/cargo alarm

v) Fire alarm

vi) General alarm.

3.4.2 Distress Signals

Distress signals should be clearly distinguishable from other calls.

3.4.3 Distinguishing Audible Signals

Differences in time patterns and/or frequencies may be used to allow bridge personnel to distinguish one signal from another.

3.4.4 Types of Audible Signals

Suggested audible signal types for navigation bridges are provided in Table 3, "Basic Types of Audible Signals for Use on Navigation Bridges." Audible signals should be designed so as not to startle bridge personnel.

3.4.5 Synthesized Speech as an Audible Warning

When synthesized speech is used as an audible warning, the warning should be preceded by a distinguishing signal to alert bridge personnel.

TABLE 3
Basic Types of Audible Signals for Use on Navigation Bridges

Type	*Typical Characteristics*	*Considerations*
Buzzer	Low intensity and low frequencies	Good alerting in quiet environments without startling bridge personnel
Bell	Moderate intensity and moderate frequencies	Penetrates low frequency noise well, abrupt onset has a high alert value
Chime	Moderate intensity and moderate frequencies	Good in quiet environments, tends not to startle
Tone	Moderate intensity and limited frequency range	Convenient for intercom transmission, high alert value if intermittent

4 Operating and Emergency Procedures

4.1 General Guidelines

4.1.1 Automatic Sequence of Operations

Operations following any setting of a bridge control device, including reversing from the maximum ahead service speed in case of emergency, are to take place in an automatic sequence and with time intervals acceptable to the machinery.

4.1.2 Emergency Stopping Device

The main propulsion machinery should be provided with an emergency-stopping device on the navigation bridge, independent from the bridge control system.

4.1.3 Availability of Flooding Control Plan

A plan clearly showing each deck, hold and boundaries of the watertight compartments, the openings therein with the means of closure and position of any controls thereof and the arrangements for the correction of any list due to flooding, is to be permanently exhibited or readily available on the navigation bridge. In addition, booklets containing the aforementioned information are to be made available to the officers of the vessel.

4.2 Design of Procedures

4.2.1 When to Provide Procedures

Written procedures should be provided for complex or infrequent task sequences and for off-normal and emergency situations that do not require immediate action (Note: Immediate actions should be basic skills known by memory).

4.2.2 Base Procedures on Task Requirements

i) To the extent possible, sequence task order in procedures to reduce extent of movement required. Assign responsibility of these tasks to competent persons. Identify the purpose and scope (to whom the procedures apply) of these procedures. Summarize records and/or other requirements as the output of these procedures.

ii) Present data to be easily read, interpreted and to the level of precision required to perform a task.

iii) Refer to components in a procedure using exactly the nomenclature that identifies the associated components and settings (i.e., labels).

4.2.3 Postulated Event Base for Emergency Procedures

Develop procedures based on postulated events (e.g., loss of steering, loss of thrusters, loss of navigational components such as GPS, emergency reballasting plans, etc.).

4.2.4 Develop and Use Constrained Vocabularies

i) Develop and use constrained nomenclature to be used in procedures, using simple and commonly understood language. Acronyms and abbreviations should be clearly and frequently defined within the procedure(s).

ii) Where procedures require external communications, they should recommend specific wording based on IMO *Standard Marine Communication Phrases.*

4.2.5 Develop and Use Consistent Style Guides

i) Develop and impose procedure style guides.

ii) Style guides should address the following:

- Numbering systems
- Wording style
- Styles and placements of graphics and tables
- Fonts and paragraph styles
- Formats for information presentation
- Stepwise numbering
- Limits and use of cross-references
- Control of branching from conditional statements
- Use of coding
- Styles for procedural warnings and cautions.
- Numbering pages
- Identifying procedures versions, approvals and publication dates

4.2.6 Wording Style and Sentence Structure

Wording style and sentence structure can make documents easy to read and procedures reliably followed. Specific guidance includes:

i) Use simple sentence structures

ii) Avoid negative sentences

iii) Present only one thought or action per sentence or procedure step

iv) Write in a command, imperative style (e.g., "Set autopilot to OFF" as opposed to "Autopilot should be OFF")

v) State procedure conditions before action steps (e.g., "If the helmsman is at the steering wheel, then set steering control to MANUAL" rather than "Set steering control to MANUAL if a helmsman is at the steering wheel").

4.2.7 Use of "May," Shall," "Will," and "Should"

i) "Shall" and "Will" are used to indicate a requirement

ii) "Should" indicates a recommended practice, preferred method or expected condition

iii) "May" indicates acceptable or suggested methods. It also denotes permission.

4.2.8 Validate Content

Content of procedures should be verified by formal review using bridge persons on watch duty as subject matter experts and by walkthrough of each procedure in the navigation bridge. Note that content validation can be critical to safe operation of a ship.

5 Labels, Placards and Job Performance Aids

5.1 General

Labeling guidelines contained in the ABS *Guidance Notes on the Application of Ergonomics to Marine Systems* should be used for the design and use of labels.

5.2 Functional Labeling

Controls and displays should be labeled clearly and unequivocally according to their function, possibly by using standardized symbols.

5.3 Label Terminology

The selection and use of terminology for labels should be consistent between controls and displays.

5.4 Operating/Technical Manual Availability

An operating/technical manual should be placed onboard the vessel that gives clear guidance to operational personnel regarding the vessel's capabilities, limitations and navigational procedures for the required bridge manning levels. This manual should include, at a minimum, the following:

i) Vessel name and Classification Society ID number

ii) Simplified diagrams

iii) Vessel navigation and maneuvering capabilities

iv) Navigational procedures

v) Periodic testing procedures.

SECTION 9 Work Environment

1 Background

The work environment in which tasks are performed has a significant influence on human performance. This Section addresses task performance design considerations associated with the navigation bridge work environment including vibration; noise; lighting; device and instrument illumination; and heating, ventilation and air conditioning (HVAC).

2 Terminology

Dark Adaptation: Dark adaptation is the process by which the human eye adjusts to lower levels of illumination through increased sensitivity to light. Visual function in very dim light has the following characteristics:

i) Visual detail is significantly reduced

ii) The eye becomes more sensitive to blue light

iii) Foveal visual performance degrades significantly, while peripheral vision becomes dominant.

dB(A): Sound level in decibels, measured using A-weighting. The use of A-weighting causes the frequency response of sound level measurement devices to mimic that of the human ear, where response is maximum at about 2 kHertz, less at very low or very high frequencies. A-weighted measurements correlate well with measures of speech interference and judgments of loudness.

Effective Temperature: An index that combines into a single value the effect of temperature, humidity and air movement on the sensation of warmth or cold. The numerical value is that of the temperature of still, saturated air that would induce an identical sensation to the human body.

Glare: Glare is the sensation produced by luminance within the visual field that is sufficiently greater than the luminance to which the eyes are adapted causing annoyance, discomfort or loss of visual performance and visibility. Glare is experienced if windows or light sources, seen directly or by reflection in shiny surfaces, are too bright compared to the general brightness within the interior of the bridge.

Illuminance: The amount of light falling on an object or surface. Illuminance is measured using units of Lux (lm/m^2) or foot-candles (fc; lm/ft^2). One foot-candle equals 10.76 Lux.

Luminance: The amount of light emitted from a source (including that reflected from a surface). Luminance is measured in candela-per-square meter (cd/m^2).

Whole Body Vibration: Mechanical vibration (or shock) transmitted to the human body as a whole. Whole body vibration is often due to the vibration of a surface supporting the body.

3 Vibration

3.1 Vibration Levels and Comfort

Uncomfortable levels of vibration should be avoided on the bridge. Vibrations should be reduced, in particular vibration in the 0-30 Hertz range, so that bridge personnel are neither hindered in their functions nor put at a health risk. Additional information on vibration can be found in the *ABS* Guide *for Crew Habitability on Ships*.

3.2 Whole Body Vibration Limits

Whole body vibration levels should not exceed 0.315 (preferred) to 0.4 m/s^2 (acceptable) in the frequency range of 0.5 to 80 Hertz.

Please refer to ABS *Guide for Crew Habitability on Ships* and the ABS *Guide for Crew Habitability on Offshore Installations* for more information on whole body vibration.

3.3 Preventing Motion Sickness

Guidance to help prevent motion sickness is provided in the ABS *Guide for Crew Habitability on Ships* and the ABS *Guide for Crew Habitability on Offshore Installations*.

4 Noise

4.1 General

The noise level and acoustic environment on a bridge should not interfere with verbal communications, mask audible alarms, be uncomfortable, contribute to fatigue of bridge personnel or reduce overall system effectiveness. Noise levels should comply with IMO Resolution A.468(XII) *Code on Noise Levels on Board Ships* and take into account IMO Resolution A.343(IX) *Recommendation on Methods of Measuring Noise Levels at Listening Posts*. Additional information on noise can be found in ABS *Guide for Crew Habitability on Ships* and the ABS *Guide for Crew Habitability on Offshore Installations*.

4.2 Maximum Noise Levels

In general, noise levels should not exceed 65 dB(A). Note that this limit is established to facilitate task performance (i.e., communications, signal detection, etc.) and is not established as a limit for hearing protection. Specific noise levels by bridge location are provided in the ABS *Guide for Crew Habitability on Ships* and the ABS *Guide for Crew Habitability on Offshore Installations*.

4.3 Location of Noise Sources

4.3.1 Exclusion of Noise Sources on Bridges

Noise from sources such as ventilation fans, engine intake fans and other sources should comply with IMO Resolution A.4681(XII), take into account IMO Resolution A.343(IX) and be excluded from the bridge through appropriate location and associated trunking.

4.3.2 Location of Noise Sources

Fixed sound signal apparatus should not be placed in the immediate vicinity of the bridge. The sound signal apparatus should be located as high as practicable and, if possible, forward of the bridge.

4.4 Audible Alarm Sound Pressure Levels

Audible alarm sound pressure (one meter from the source) should be at least 75 dB(A) and at least 10 dB(A) or preferably 20 dB(A), above ambient noise levels existing during normal operations. Audible alarm sound pressures in a space should not exceed 115 dB(A).

5 Lighting

5.1 General

A satisfactory level of lighting should be provided to enable personnel to complete required navigation bridge tasks at sea and in port and under day and night conditions. Specific levels for lighting on the bridge and adjacent areas are provided in the ABS *Guide for Crew Habitability on Ships* and the ABS *Guide for Crew Habitability on Offshore Installations.*

5.2 Task Area Lighting

Individual task areas should have greater luminance than the general bridge lighting level.

5.3 Glare

Glare can significantly reduce the readability of displays, labels, placards and so on. Of particular concern is spectral glare, which is that which is reflected from smooth, highly reflective surfaces. Means to avoid glare are presented below.

i) Glare and stray image reflections should be avoided in the bridge environment.

ii) High contrast in brightness between work area and surroundings should be avoided.

iii) The luminance of the task area should not be greater than three times the average luminance of the surrounding area.

iv) A non-reflective or matte surface should be used to keep indirect glare to a minimum.

v) Lighting sources should be designed and located to avoid creating glare from working and display surfaces.

vi) Reflection in windows of devices, instruments and consoles and other reflective enclosures should be avoided.

vii) Devices should be designed and fitted to minimize glare, reflection or being obscured by strong light.

5.4 Adjustability of the Lighting System

Bridge personnel should be able to adjust the lighting, both brightness and direction as required in different areas of the bridge and by the needs of individual instruments and controls. Specific guidance for levels of bridge lighting can be found in the ABS *Guide for Crew Habitability on Ships* and the ABS *Guide for Crew Habitability on Offshore Installations*.

5.5 Dark Adaptation

Whenever possible, red or filtered white light should be used to maintain dark adaptation in areas or on items of equipment requiring illumination in the operational mode. This should include devices in the bridge wings. Note that use of low level red light can reduce the readability of some color coded lights and labels, particularly those that are red, and can lead to the failure to detect the onset or offset of a red indicator light or alarm. Further guidance for low-level bridge lighting can be found in the ABS *Guide for Crew Habitability on Ships* and the ABS *Guide for Crew Habitability on Offshore Installations.*

5.6 Lighting Controls

5.7.1 Location

Lighting controls should be provided at entrances and exits of enclosed workplace areas.

5.7.2 Lighting Control Illumination

Lighting controls should be illuminated.

5.7 Flicker Avoidance

Light sources should not have a perceptible flicker.

5.8 Lighting Control Device

A main workstation console lighting control device should be provided.

5.9 Indirect Low-Level Lighting

During nighttime operations, indirect low-level red lighting or low level white lighting should be available at deck level, especially for internal doors and staircases.

6 Device and Instrument Illumination

6.1 Instrument and Control Illumination and Lighting

All instruments and controls should have a means of illumination that is adjustable to zero with the exception of alarms and dimmer controls which should remain visible at all times.

6.2 Lighting for Night Time and Dark Operations

Relevant equipment fitted on the bridge should include either internal or external lighting to ensure that bridge personnel can discern them. Red light or low level white lighting should be used to maintain dark adaptation whenever possible in areas or on items of equipment, other than the chart table, requiring illumination in the operational mode. This should include instruments in the bridge wings. Provision should be made to prevent red lights from being seen from outside the vessel.

See also Section 8, Subparagraph 3.2.3, “Color Coding Compatibility with Ambient Illumination”

6.3 Instrument Lighting

Instruments that provide information should be presented on a background of high contrast. They should emit as little light as possible and have light text on a dark, non-reflecting background during nighttime operations.

7 Heating, Ventilation and Air Conditioning

7.1 General

The bridge should be equipped with a heating, ventilation and air conditioning (HVAC) system that allows regulation of the temperature and humidity on the bridge. Additional information on indoor climate variables can be found in the ABS *Guide for Crew Habitability on Ships* and the ABS *Guide for Crew Habitability on Offshore Installations*.

7.2 Temperature Range

The HVAC system should maintain a temperature range from 14 to 30 degrees Celsius (57 to 86 degrees Fahrenheit) with the preferred range being 18 to 26.5 degrees Celsius (65 to 80 degrees Fahrenheit). If there is no mechanism to adjust the temperature, it should be 22 ± 1 degrees Celsius (72 degrees Fahrenheit) as measured at the air return vent.

7.3 Effective Temperature

The optimum range of effective temperature, which differs from normal temperature, for accomplishing light work while dressed appropriately for the season or climate is 21 to 27 degrees Celsius (70 to 80 degrees Fahrenheit) in a warm climate or during the summer and 18 to 24 degrees Celsius (65 to 75 degrees Fahrenheit) in a colder climate or during the winter.

7.4 Temperature Differences

Temperature difference between any two points within the workplace should be maintained less than 5 degrees Celsius, for example the temperature of the air at floor level and at head level.

7.5 Humidity

Humidity should be maintained between 20 and 60 percent with 40 to 45 percent preferred. Approximately 45 percent relative humidity should be provided at 21°C (70°F). This value should decrease with rising temperatures but should remain above 20 percent to prevent irritation and drying of body tissues, eyes, skin and respiratory tract.

7.6 Hot Air Discharge

Heating systems should be designed so that hot air discharge is not directed at personnel at their workstation.

7.7 Cold Air Discharge

Air conditioning systems should be designed such that cold air discharge is not directed at personnel at their workstation.

7.8 Air Velocities

Ventilating systems should not produce air velocities exceeding 0.5 m/s. If possible, the preferred air velocity of 0.3 m/s should be used to preclude book manual pages from being turned or papers from being blown off work surfaces.

7.9 Positive Pressure

The ventilation system should provide a positive pressure in the bridge.

7.10 Supply Airflow

The ventilation system should supply outdoor air of at least 0.008 m^3/second for each person in the bridge.

This Page Intentionally Left Blank

SECTION 10 Maintenance by Bridge Persons on Watch Duty

1 Background

In the course of vessel operations, some amount of maintenance may be required by bridge persons on watch duty, however, their primary responsibility is the safe and efficient conduct of vessel operations. Therefore, bridge maintenance performed by bridge personnel should be limited to that which is directly and immediately related to the safety and efficiency of operations.

2 Terminology

Accessibility: The ability of personnel to easily access equipment that requires maintenance, inspection, removal or replacement while wearing the appropriate clothing, including personal protective equipment and using all necessary tools and test equipment.

Anthropometrics: Data relating to physical body dimensions. It includes body characteristics such as size, breadth and the distances between anatomical landmarks, such as elbow to fingertip.

Bridge Wing: Parts of the bridge on both sides of the vessel's wheelhouse extending to the sides.

Catwalk: Extension to a deck that is wide enough to allow the passage of a person.

Maintainability: The ability to carry out rapid and effective system restoration to maintain the equipment at a specified level of performance.

Maintenance: All activities necessary to keep equipment in or restore it to a specified level of performance.

3 Bridge Watchstander Maintenance

3.1 Minimize Maintenance Requirements

Bridge persons on watch duty and other bridge personnel maintenance requirements should be minimized and should extend to routine maintenance activities such as the following:

i) Changing paper, inks, etc., in printing/plotting/trending devices

ii) Replacement of simple indicator light bulbs or accessible, low voltage fuses

iii) Wiping surfaces of display screens and surfaces such as radars, position plotters and charts (electronic or paper)

iv) Simple housekeeping

Maintenance such as the following should not normally be required of bridge personnel:

i) Repair of window wipers or heater elements

ii) Repair or replacement of main equipment or components (e.g., radio sets, circuit boards, printers)

iii) Cleaning, repair or replacement of furnishings.

3.2 Maintenance Performed within the Bridge Area Only

Bridge persons on watch duty should not generally be charged with maintenance requiring them to leave the bridge or bridge wings. Maintenance on catwalks (e.g., to access the external surfaces of bridge windows) should be avoided.

3.3 Maintenance Interface and Communications

All maintenance activities associated with bridge-managed functions (e.g., steering gear tests, taking generator sets off-line, radar calibrations, etc.) should be coordinated with the Master or watchstanding Mate.

3.4 Bridge Deck Drainage

Outside bridge decks, including the wings, should be provided with adequate drainage.

SECTION 11 Personnel Safety

1 Background

To achieve personal safety for bridge personnel, the bridge must be designed to protect them from injury during normal conditions as well as abnormal conditions such as high seas. The following provides guidelines that will facilitate personnel safety on the bridge.

2 Terminology

Grab-rails: Hand grabs mounted to bridge surfaces, such as bulkheads that are used to help negotiate awkward accesses.

Handrails: Rails mounted along passageways, ladder ways, etc., that are used to safely negotiate spaces and work areas.

Occupational Safety: The science of preventing individuals from being injured or contracting diseases in the course of their work.

3 Occupational Safety

3.1 Bridge Physical Hazards

The bridge area should be free of physical hazards to bridge personnel. There should be no:

i) Sharp edges or protuberances that could cause injury to personnel from the side or from above

ii) Trip hazards on the bridge deck such as curled up carpet edges, loose gratings, duckboards or equipment.

3.2 Securing Equipment

There should be a means for securing portable equipment.

3.3 Safety Equipment Accessibility

All safety equipment carried on the bridge should be clearly marked, be easily accessible and have its stowage position clearly indicated.

3.4 Secure Seating

Where integrated bridge systems are provided that present a centralized position from which piloting, navigation and communications can be performed, a permanent (moveable on tracks) seat should be provided for the persons on watch duty.

Where seating has been provided on the bridge, a method for securing the seating should be provided.

3.5 Adequate Electrical Outlets

Adequate electrical outlets should be provided on the bridge to preclude loose leads to portable equipment.

3.6 Refreshment Facilities

Refreshment facilities provided on the bridge should be designed and located to preclude damage to bridge equipment or injury to personnel.

3.7 Emergency Lighting

Emergency lighting should be provided for the bridge control center, stairways and exits.

3.8 Redundant Lighting Circuits

Bridge control center lighting should have two separate circuits to ensure that the loss of one circuit does not leave the bridge in darkness.

3.9 Handrails and Grab Rails

Sufficient handrails or grab rails should be fitted to enable personnel to move or stand safely during inclement weather. Protection of stairway openings should be given special consideration. Additional information on the design of handrails and grab rails can be found in the ABS *Guidance Notes on the Application of Ergonomics to Marine Systems*.

4 Mechanical/Electrical Safety

4.1 Electrical Circuit Fault Isolation

Circuits for equipment on the bridge should be designed to allow isolation of a fault without having to take other circuits out of service and to allow safe and easy replacement.

4.2 Grounding of Metal on the Bridge

All non-current carrying metal parts on a bridge should be effectively grounded.

4.3 Component Replacement Safeguards

Replaceable components on the bridge should be designed and arranged so that it would be impossible to connect or replace them incorrectly.

5 Bridge Surfaces

5.1 Bridge Finishes

The bridge surface finishes should be considered an integral part of the structure, layout and environmental design.

5.2 Glare-Free Surfaces

All prepared surfaces should be glare-free.

5.3 Non-Slip Surfaces

Wheelhouse, bridge wing and upper bridge decks should have non-slip standing surfaces, whether wet or dry. The surfaces of chart tables, workstations and other equipment where objects may be placed should be provided with non-slip surfaces or other means to protect objects set upon them from sliding off.

5.4 Robust Surfaces

All surfaces of deckheads, bulkheads, doors and floors should be robust enough to withstand the daily wear of the at-sea environment. All surfaces should be capable of withstanding a temperature range of -20 to +70 degrees Celsius (-4 to +158 degrees Fahrenheit), seawater, oils and solvents common to vessels and installations and ultra-violet light.

5.5 Bridge Deck Drainage

Outside bridge decks, including the wings, should be provided with adequate drainage.

This Page Intentionally Left Blank

SECTION **12 Facilities**

1 Background

Human performance can be affected by the facilities provided on or adjacent to the bridge. Factors such as refreshment facilities, sanitary facilities and the interior décor should be designed to minimize human stress and distraction. See also the ABS *Guide for Crew Habitability on Ships* and the ABS *Guide for Crew Habitability on Offshore Installations.*

2 Terminology

Non-saturated Colors: Saturation in color usage refers to the degree that a hue differs from a gray of the same lightness. Therefore, a non-saturated color is closer to gray and appears washed out.

Reflectance: The amount of light that is reflected (bounced back) from a surface.

3 Food and Refreshment

3.1 Design of Refreshment Facilities

Refreshment facilities and other amenities provided for the bridge personnel should include means for preventing damage to bridge equipment and injury to personnel resulting from the use of such facilities and amenities.

4 Sanitary Facilities

4.1 Availability of Toilet Facilities

Toilet facilities should be provided on or adjacent to the bridge.

5 Interior Décor

5.1 Bridge Color Choice

Colors used in the bridge should give a calm overall impression to personnel, minimize reflections and reduce contrast between the interior of the bridge and the exterior environment.

5.2 Interior Color Design

Bright colors should not be used. Dark or mid-green colors are recommended. Alternatively, blue or brown may be used.

5.3 Reflectance Range of Colors

Colors that are used on the bridge should minimize reflectance and glare. Table 1, "Reflectance Ranges of Typical Color Densities," provides the reflectance range for some typical color densities.

TABLE 1
Reflectance Ranges of Typical Color Densities

Reflectance Range	*5% to 10%*	*15% to 30%*	*50% to 80%*	*80% to 90%*
Typical Color Densities	Dark Green Blue/Brown	Mid-Green Blue/Red	Pale Green Blue/Yellow	Off White Pale Yellow

APPENDIX 1 Ergonomic Design and Evaluation Process

1 Introduction

Ergonomics focuses on and represents bridge personnel needs and requirements throughout the life cycle of systems. The goal is to minimize human error, thereby maximizing human and total system safety and effectiveness. This is accomplished through:

i) The application of ergonomic research and design guidance,

ii) Conduct of appropriate analyses and solicitation of bridge personnel input to derive requirements and needs,

iii) Application of a cogent, pragmatic, ergonomic design process.

This Appendix presents a basic ergonomic design process that can be performed during the initial design of a new navigation bridge. It also presents a series of special interest processes that can be used to improve the interface design of existing bridges.

The designers of bridges should accommodate ergonomic considerations and mitigate human error through the design of the bridge. This is accomplished through the application of an ergonomic design process for navigation bridges. One such notional process has been developed for these Guidance Notes and is presented in Subsection 3 of this Appendix.

2 Terminology

Communications: Design for clear, reliable and understandable internal-to-vessel, vessel-to-vessel and vessel-to-shore voice communications

Error control: Exercising control over the probability, frequency, criticality and recoverability of human errors that may occur.

Maintenance of situation awareness: Persons on watch duty understanding of: the condition of equipment, hull performance, sea and weather conditions, hazards to navigation, crew capabilities and presence and intentions of other occupants of the waterways.

Staffing levels: The number of crew who will staff the bridge during operations. This addresses bridge workload, both immediate (i.e., number of tasks that must be performed in a short period of time) and ongoing (i.e., work done over the course of a voyage). This also addresses bridge personnel fatigue.

Task-based design: Design of interfaces based on the complexity, sequence, importance and error tolerance of tasks performed on the bridge.

Work schedules: The number of continuous hours and the work shift patterns performed by bridge persons on watch duty.

3 Navigation Bridge Ergonomic Design Processes

3.1 New Bridge Design Process

The bridge system design and development process is typically started in the maritime industry by the identification of service requirements for a vessel, culminating in the development of a design and performance specification that can be used by vessel builders to prepare bids and initiate detailed design. A typical process may consists of steps such as:

i) Requirements determination (what the vessel must do)

ii) Function analysis, allocation and task analysis (generally how it will do it)

iii) Development of design concepts (specifically how it will do it)

iv) Design validation (based on evolved concepts) and generation of build specifications

These steps generally will be performed by different entities. Requirement determination will be made by the organization in need of a vessel for a specific service. A builder's team of naval architects will perform analyses, vessel design development and some elements of detailed design, however, some of this is left to the construction yard to determine at build time. All parties should participate in design validation, but on-site construction personnel and surveyors will perform much of this as building progresses. Throughout the bridge design process, there will be human performance design issues to be reconciled and to do so, a rigorous process is needed. Specific activities for a representative process, which ergonomic specialists would perform, are introduced below.

3.1.1 Requirements Analysis

Initial design and planning typically focuses on identifying requirements. To those commissioning the building of a vessel, fundamental requirements address considerations such as: cost of acquisition, operational and maintenance cost, performance factors (such as cargo carrying tonnage), hull characteristics (i.e., displacement, fairway access limitations due to beam, draft or cargo), crewing and so on. In terms of those considerations associated with humans and the navigation bridge, requirements may include:

i) Those typically associated with the navigation bridge (such as communications, piloting, position fixing)

ii) Identifying the bridge requirements associated with the specific trade (e.g., tanker, container shipping, tugs, Mobile Offshore Drilling Unit, floating production unit, etc.) and possibly environments (e.g., North Atlantic, Trans-Pacific, Caribbean, Arabian Gulf, Gulf of Mexico, etc., including whatever Port State and Coastal State controls and requirements are imposed)

iii) Constraints on design (e.g., such as crew size, possibly imposed watch systems, extent of automation)

iv) Other factors, such as State of Registry and Classification Society to be used.

Bridge design activities focus on developing an understanding of what bridge personnel need and require for a successful system. This can be done by a number of methods including:

i) *Interviews/questionnaires.* Where questionnaires or interviews are administered to bridge personnel to understand their needs and requirements. Bridge personnel involved in the studies should represent the full range of expected bridge personnel with respect to age, gender, physical capabilities and limitations, physical size, education and aptitude and experience.

ii) *Focus groups.* Where a professional moderator, through discussions that address needs and requirements, leads small groups of representative bridge personnel.

iii) *Task observation.* Where a group of trained observers watch bridge task performance. Bridge persons on watch duty walk through operations (on a bridge or in a simulator) and the observers and Masters/Mates/others discuss tasks and design requirements.

These activities should be iterative in nature so that the designers gain knowledge of what bridge personnel need and require. The results of these activities provide information and data for the remainder of the activities during the initial design.

3.1.2 Function Analysis and Allocation

Function analysis refers to the process whereby the functions. For example, the "action for which a person or thing is particularly fitted or employed," (e.g., jobs, hardware utilities, human tasks to be performed) are identified. Functions flow from requirements. Functions are identified from the highest level (e.g., navigate, perform surveillance, plan) to lower level functions (e.g., plot position, plot course) and ultimately to human and machine functions and tasks (e.g., triangulate, use GPS, set vessel course and speed).

With regard to allocation of functions to humans and machines, the level of design freedom allowed bridge designers is typically constrained to:

i) Selection of devices and components (e.g., selection of existing radars sets, VHF communications devices, navigational aids, etc., that satisfy functional requirements)

ii) Design of internal and external arrangements in the general area of the bridge.

In other words, the basic design task is the selection of components (e.g., conning, navigation display, etc.) that meet functional requirements and then arranging them within the designed confines of the navigation bridge.

This being the case, function allocation involves a tradeoff process whereby tradeoff factors (e.g.; cost, reliability, ease of human use and maintenance, extent to which requirements are satisfied, precision, compatibility) are considered and alternatively weighted and applied across the universe of already available (generally off-the-shelf) competing components. Once components are selected, human roles and tasks involved in operation/maintenance of each component are, for the most part, prescribed. To help guide consideration of ergonomics in this tradeoff process, Table 1, "Human and Machine Capabilities," provides a brief illustration of the types of functions/tasks that are better performed by humans or machines. Where a design objective for the navigation bridge, is to reduce persons on watch duty workload (i.e., as a control on manning, cost, fatigue control), a simple process such as that presented in Figure 1, "Simple Function Allocation Model to Reduce Workload," can be used to support tradeoffs.

TABLE 1
Human and Machine Capabilities

Humans Excel at:	*Machines Excel at:*
Detection of certain forms of very low energy levels	Monitoring (both humans and machines)
Sensitivity to an extremely wide variety of stimuli	Performing routine, repetitive or very precise operations
Perceiving patterns and making generalizations about them	Responding very quickly to control signals
Ability to store large amounts of information for long periods and recalling relevant facts at appropriate moments	Storing and recalling large amounts of information in short time periods
Ability to exercise judgment where events cannot be completely defined	Performing complex and rapid computation with high accuracy
Improvising and adopting to flexible procedures	Sensitivity to stimuli beyond the range of human sensitivity (infrared, radio waves, etc.)
Ability to react to unexpected low probability events	Doing many different things at one time
Applying originality in solving problems	Exerting large amounts of force smoothly and precisely
Ability to profit from experience and alter course of action	Insensitivity to extraneous factors
Ability to perform fine manipulation, especially where misalignment appears unexpectedly	Ability to repeat operations very rapidly, continuously and precisely the same way over a long period
Ability to continue to perform when overloaded	Operating in environments which are hostile to humans or beyond human tolerance
Ability to reason inductively	Deductive processes

Note: Based on Fitts List for function allocation

FIGURE 1
Simple Function Allocation Model to Reduce Workload

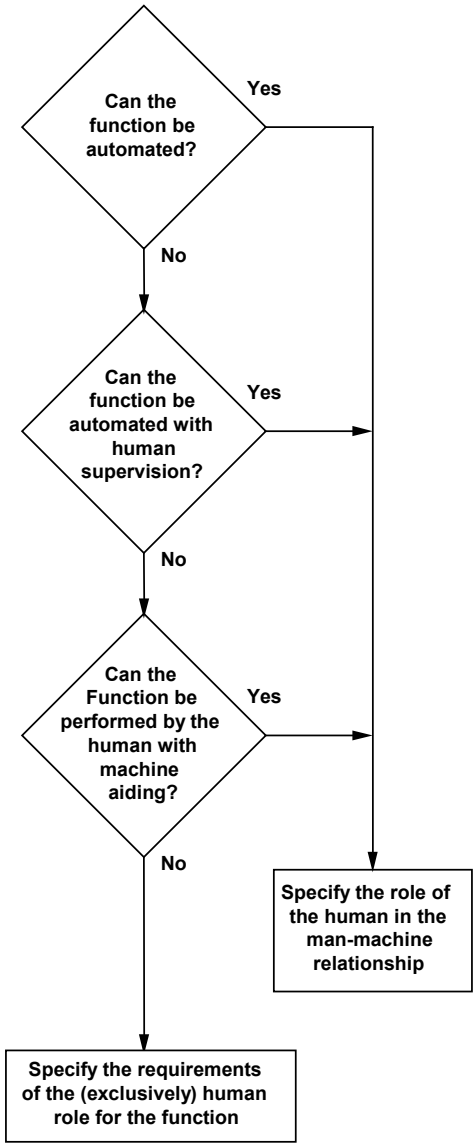

3.1.3 Task Analysis

Task analysis focuses on understanding the tasks that a human will perform with the system including:

i) The inputs and outputs for those tasks in terms of information and control actions required

ii) Feedback

iii) Dependencies between tasks

iv) Sequence of performance

v) Time and frequency of performance

vi) Accuracy requirements

vii) Criticality of the tasks

viii) Error tolerance.

By performing a task analysis, the designer develops an understanding of the how a navigation bridge can be designed and arranged to support reliable task performance. There are a number of ways to perform a task analysis. Please refer to Kirwan and Ainsworth (1992) for detailed guidance on task analysis.

3.1.4 Workflow Analysis

Workflow analysis focuses on understanding the flow and sequence of human activity as work is performed. It can be used to help understand how bridge personnel move between controls, displays, control panels and workstations in performing a task. Such information can be used to arrange control panels and workstations based on task sequences, frequencies and criticality. One method for performing a workflow analysis is a link analysis where physical representations of the work environment are used to draw lines and assign values for factors such as frequency and importance that illustrate workflow and how the design could be improved.

3.1.5 Develop and Explore Bridge Concepts

The focus here is to develop and explore various design concepts based on functions, requirements, human allocated tasks and selected equipment. Three basic steps for concept exploration of Human-Machine Interface (HMI) design are illustrated in Figure 2, "Concept Development and Exploration," and briefly described below.

i) *Develop concepts for interface designs.* This is typically done with the engineers on a design team. Various approaches to the design of the interface will be developed based on the output from the analyses discussed above. In some cases, an idea formation process can be employed where concepts are developed in brainstorming sessions among ergonomic professionals, Masters and mates and engineering professionals.

ii) *Develop low-fidelity prototypes.* Low-fidelity prototypes will be prepared for the various interface design concepts. These may consist of no more than paper prototypes of the interface to more complex mockups using foam core or computer simulations.

iii) *Evaluate the concepts.* The concepts can be evaluated through a number of different methods including:

- Subject Matter Expert assessments
- Bridge personnel evaluations
- Walkthroughs and formal usability testing
- Testing aspects of design in bridge simulators.

The results of the evaluations will be used to eliminate some of the design concepts and enhance others. This is an iterative process leading to one or more concepts to be used during concept demonstration and validation.

3.1.6 Initiate Specification Development

Design specifications (even though in a preliminary stage) include functional specifications, which describe the functions and tasks being performed and how the design should support them and interface specifications that describe how bridge personnel interface will be designed to support the requirements in the functional specification. At this stage, the specifications are not fully complete and will be fully evolved in later steps. Interface specifications should take into account appropriate ergonomic standards and guidelines.

FIGURE 2
Concept Development and Exploration

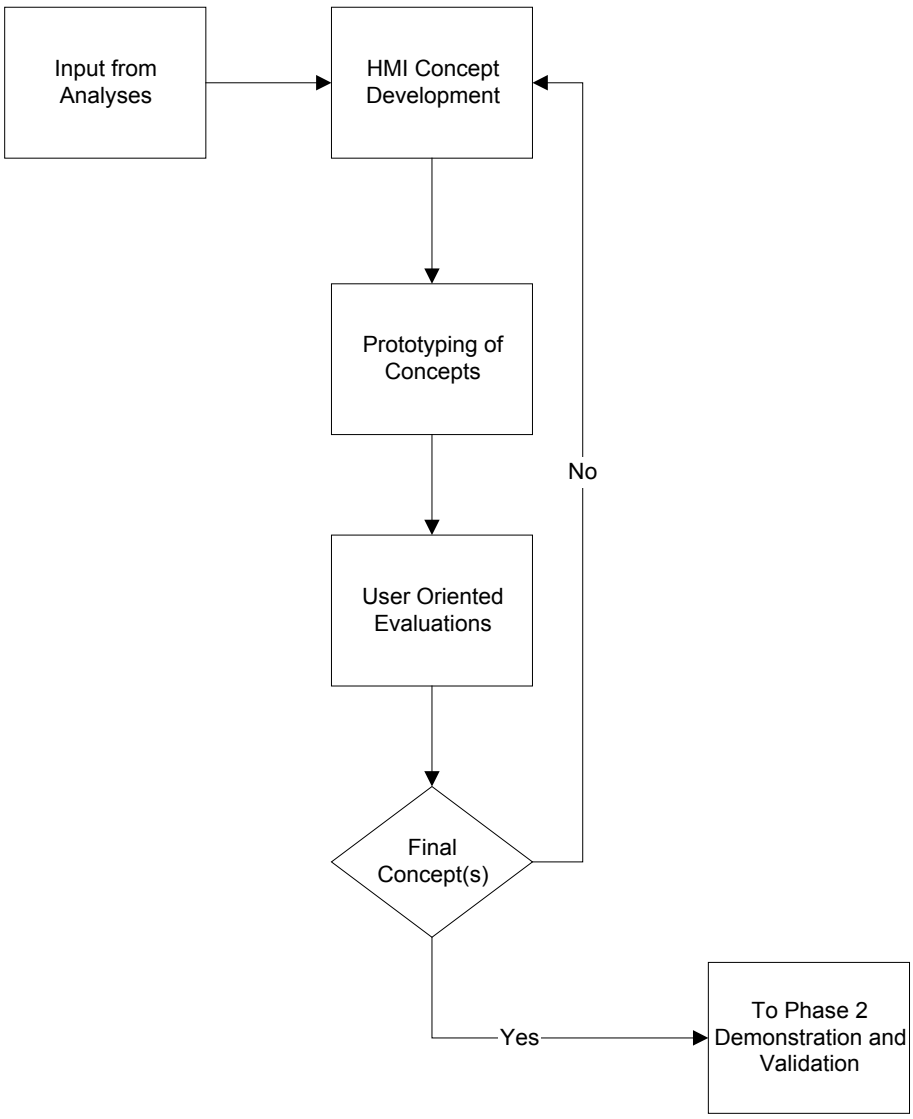

3.1.7 Specification and Design Validation

The focus of specification and design validation is to verify the capabilities of the design concept(s). Typical iterative activities, illustrated in Figure 3, "Demonstration and Validation Process," include the following:

i) *Develop prototypes and mockups.* The concepts emerging from the concept exploration are developed into more formal prototypes or mockups. These prototypes and mockups will be used to assess the design.

ii) *Interface assessments.* Using prototypes and mockups, the effectiveness of the interface is assessed with respect to human error, ease of use and bridge persons on watch duty expectations. In addition, the overall suitability of the bridge can be assessed. These assessments can be performed through a number of methods including assessments by professional ergonomists.

iii) *Design and specification refinement.* Based on the results of the interface assessments, the design and associated specifications are further developed. In some cases, concepts may be rejected due to lack of suitability for meeting bridge personnel requirements or other factors.

Data from the interface design assessments can also be used to update function and task analysis data and refine requirements.

FIGURE 3
Demonstration and Validation Process

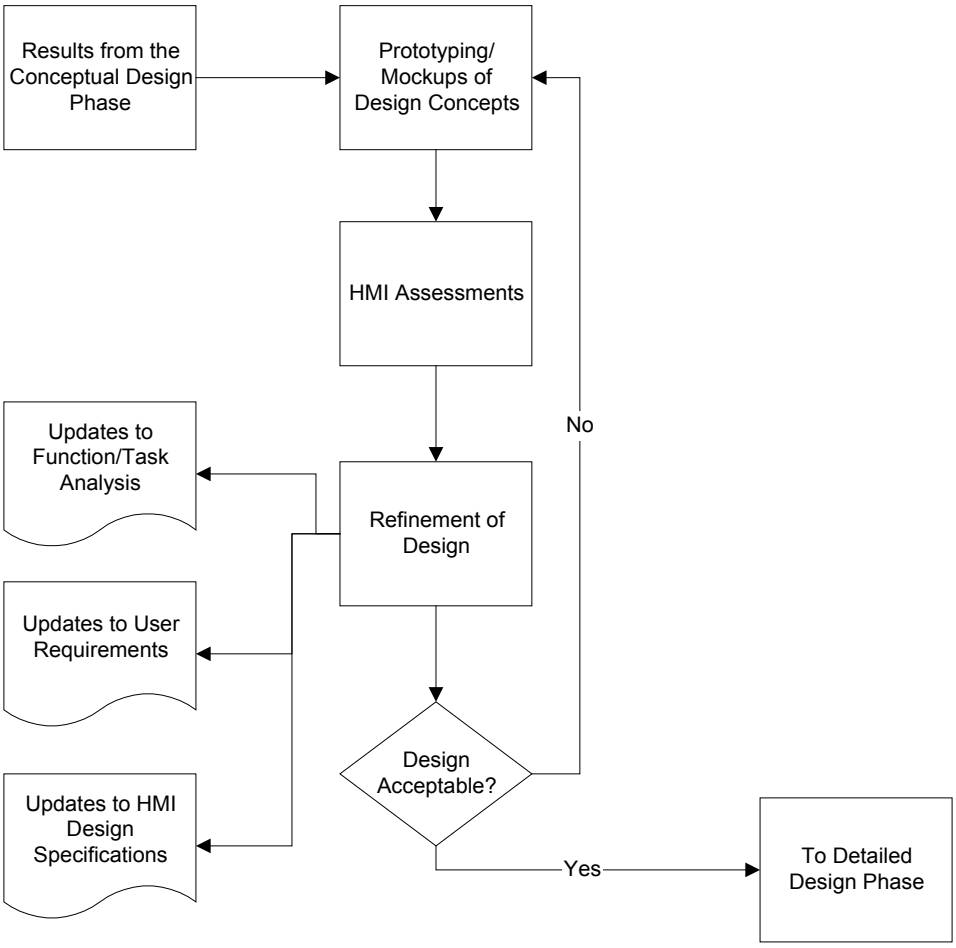

3.1.8 Detailed Design

The focus of detailed design is to take the design specifications and final concept and develop the full design of the navigation bridge. Information gained during specification and design validation, including the updated interface design specifications, will be used to drive the detailed design of the interface. It is critical that ergonomic personnel work closely with the other design engineers to ensure that ergonomic considerations are weighed in design decisions and that the interface design is practical from an engineering perspective. Typical activities include the following:

i) Task analysis to define procedures and training

ii) Interface specifications and task analysis to define interface design flows which illustrate bridge personnel actions and control/display response

iii) Detailed design drawings of control panels, workstations and other areas of the vessel that have a human interface

iv) Interface design specifications, task analysis data and other relevant documents should be updated as new requirements are learned concerning the interface

v) Design reviews that are focused on the interface

vi) Prototypes and Mockups

vii) Bridge personnel testing

viii) Iterative development of detailed design.

3.1.9 Design Implementation

The focus of design implementation is on building the vessel. Ergonomic activities at this point will primarily be consulting on issues that arise as the design is implemented, formal acceptance testing for the interface and capturing lessons learned for future development. In particular, ergonomic personnel should develop a plan to collect operational lessons learned from bridge persons on watch duty regarding the usability of the interface design and how it could be improved.

3.2 Processes for Improving Design Aspects of Existing Navigation Bridges

Presented in this Paragraph are general approaches for improving navigation bridge design (e.g., any time after construction) providing specific guidance addressing the improvement of the following ergonomic concerns:

i) Ergonomic issue tracking

ii) Communications

iii) Labels and signs

iv) Procedures and job aids

v) Information transfer and display

vi) Human interfaces

vii) Training

3.2.1 Sample Process for Ergonomic Issues Tracking

3.2.1(a) Objectives. The objectives of this task are as follows:

i) Identify tasks and areas with potential ergonomic issues

ii) Define standardized work environmental limits

iii) Identify safety hazards

iv) Identify design factors for improved ergonomics

v) Define specific actions

vi) Prepare ergonomic specifications.

3.2.1(b) Worksteps:

Step 1. Identify jobs and areas for design of improved work environment and safety. A sample of tasks and areas will be selected for further analysis based on ergonomic issues. This sample will represent extremes in terms of ambient noise, temperature, humidity, illumination, safety related equipment design factors and mechanical hazards.

Step 2. Define standardized work environmental limits. Various standards provide guidance on acceptable work environment limits. These will be used to define a set of proposed limits for work environments.

Step 3. Identify safety hazards. Representative safety hazards will be identified for facilities and equipment that are involved in the tasks and areas from Step 1.

Step 4. Identify ergonomic design factors. Potential solutions to be considered will include elimination of the hazard, elimination of human access, barriers and guards, redesign, warning labels, procedures and special training. For each safety hazard from Step 3, a preferred approach will be defined and documented.

Step 5. Define specific actions. Treatments of factors that exceed the limits established in Step 2 will include design approaches such as noise attenuation at the source, noise attenuation at the ear, enhanced ventilation and cooling, protective clothing and fixed or portable additional lighting. The effectiveness of alternate solutions on environmental factors that exceed the limits from Step 2 will be assessed.

Step 6. Prepare ergonomic specification. The rationales and results from the previous steps will be incorporated into an ergonomic specification document. This may be applicable to design of work environment and safety improvements on a current project as well as future projects.

3.2.1(c) Product. The primary product of this task will be the ergonomic specification from Step 6.

3.2.2 Sample Process for Improvement of Bridge Communications

3.2.2(a) Objectives. The objectives of this activity are to analyze communications in terms of communication links and how communications are made and to recommend modifications to the communication systems.

3.2.2(b) Worksteps:

Step 1. *Analyze communications* in terms of the links, frequency, information importance and environmental conditions under which communications are made (e.g., noise level).

Step 2. *Generate a link analysis* of communications requirements among various stations (e.g., control rooms outside stations).

Step 3. *Identify conditions* that can potentially interfere with speech communications and speech intelligibility (e.g., noisy equipment).

Step 4. *Conduct a communications "error analysis"* to identify, for selected links, communications requirements, environmental conditions, potential errors, error criticality and causal and contributory factors.

Step 5. *Develop communications criteria,* including standard message format and syntax (see IMO *Standard Marine Communication Phrases* (SMCP), links and modes of communications among stations, to reduce error likelihood and improve communications accuracy.

Step 6. *Survey communications devices* meeting requirements that are not in place (e.g., use of noise canceling technology).

Step 7. *Make specific recommendations* concerning improved communications system design based on assessments of the capabilities of state-of-the-art communications devices.

Step 8. *Prepare ergonomic design specifications* for communications (e.g., noise levels, types of communications, location of communication devices, etc.).

Step 9. *Perform speech intelligibility testing* under realistic conditions.

Step 10. *Generate an implementation plan* and a cost estimate for implementing the communications systems specification and recommendations.

3.2.2(c) Products. The products of this activity should be a series of recommendations and design specifications related to:

i) Communications hardware and software

ii) Human-machine interfaces

iii) Message format and syntax

iv) A list of constraints associated with communications (e.g., ambient noise)

v) A plan and cost estimate to implement the communications system recommendations.

3.2.3 Sample Process for Improvement of Labels and Signs

3.2.3(a) Objectives. The objectives are to develop and implement standards for labeling and marking of operating components, including controls, displays, communications devices, major equipment and associated operating components.

3.2.3(b) Worksteps:

Step 1. *Survey color coding* and other conventions used aboard.

Step 2. *Survey general bridge coding conventions.*

Step 3. *Review applicable standards and guidelines* related to design of labels and signs and other identifying markings in industrial applications, from safety and ergonomic literature and industry conventions (see ASTM-1166, *Standard Practices for Human Engineering Design for Marine Systems, Equipment and Facilities and* ABS *Guidance Notes on the Application of Ergonomics to Marine Systems*).

Step 4. *Establish a specific Labels and Signs/Placards Design Specification.* This should address the following:

i) Content

ii) Wording and nomenclature

iii) Colors, fonts and other detailed characteristics

iv) Method of affixing to components labeled

v) Style guides for warnings and cautions

vi) Consistency with written documentation, procedures and computer display nomenclature

viii) Method of generation of labels and markings (engraving for example)

Step 5. *Develop list* of required signs and labels.

Step 6. *Develop a label* consistent with the labeling standard, for all components specified.

Step 7. *Support development and manufacture of the labels and markings.*

Step 8. *Monitor installation* of the levels and markings.

Step 9. *Verify and validate.* All labels and markings installed undergo a verification and validation step.

3.2.3(c) Products. The products of this activity include:

i) A platform specific "Style Guide" and standard for labels and markings.

ii) Procedures for specifying and acquiring levels, markings and warning placards.

iii) Procedures for verifying and validating the content and accuracy of labels, markings and placards.

3.2.4 Sample Process for Improvement of Procedures/Job Aids

3.2.4(a) Objectives. The main objective of this activity will be to specify requirements associated with generation of operating, maintenance and emergency procedures and job aids. Specific objectives include:

i) Identification of required procedures based on Failure Modes Effects and Criticality Analysis (FMECA) or similar analysis.

ii) Identification of required procedures based on routine and normal operating and maintenance requirements.

iii) Generation of procedures style guides.

iv) Generation of written procedures based on the style guides and requirements.

3.2.4(b) Worksteps:

Step 1. Identify normal operating procedures that are used in the conduct of normal and routine operations.

Step 2. Identify abnormal or emergency operating procedures. These will be identified via failure modes and effects and criticality analyses or similar.

Step 3. Survey information coding conventions. Survey general bridge procedures and design conventions.

Step 4. Review applicable standards and guidelines related to design of procedures.

Step 5. Establish procedures writing guide. This standard will address procedure:

i) Content, wording and nomenclature

ii) Colors, fonts and other detailed characteristics

iii) Information mapping and decision making

iv) Style guides for stepwise activities

v) Style guides for embedded warnings and cautions

vi) Consistency with labels and marking

vii) Standardized vocabulary

viii) Storage, update and accessibility

ix) Use as part of team and individual training

Step 6. Develop protocol for verifying and validating procedures as they are written.

Step 7. Assist in writing procedures.

Step 8. Verify and validate. All procedures undergo verification and validation step.

3.2.4(c) Products. The products of this activity include:

i) Procedures writing guide

ii) List of applicable procedures, normal and abnormal operations

iii) A complete set of written procedures, verified and validated

3.2.5 Sample Process for Improvement of Display Design

3.2.5(a) Objectives. The objectives of this task are to:

i) Define information requirements per critical task or operation

ii) Define information items

iii) Identify information formats

iv) Design screen layouts and human-computer interfaces per formats

v) Define data base requirements

vi) Prepare information display design specification

3.2.5(b) Worksteps:

Step 1. Define information requirements per job/station. Information requirements will identify the information items needed at each location for each critical task.

Step 2. Define a representative sample of information items. Information items from Step 1 will be reviewed to establish a representative set of items for further analysis. This step cannot be performed in total independence of Step 3 because the intent will be to identify classes of information items and a representative sample of specific items per class. Steps 2 and 3 will be performed in parallel and iterated as required.

Step 3. Identify information classes and formats for workstations. Individual information items will be categorized to identify a number of information classes. Each such class will eventually be represented as an information object in an object with associated information display requirements. Information classes/objects could include those related to critical tasks such as collision avoidance, navigation plans, port entries, tug interface, berthing and unberthing, among others.

Step 4. Prepare display specification. Information from the above steps including object and attribute characteristics and human-computer interface functionality will be collected and documented in a display design specification. The difference between the information requirements (Step 3) and the specification will be that the former is aimed at providing information for system procurement while the latter will be aimed at developers and bridge personnel.

Step 6. Design display layouts and human-computer interfaces. Each information class will have unique attributes and will require a standard format for display of the attributes.

3.2.5(c) Products. Information display designs based on critical tasks and operational information requirements.

3.2.6 Sample Process for Improvement of Human-Machine Interfaces

3.2.6(a) Objectives. The objectives of this activity are as follows:

i) Define a representative sample of existing issues.

ii) Identify applicable design criteria and guidelines.

iii) Identify candidate design improvements.

iv) Select design improvements.

v) Design and document improvements.

vi) Develop human-machine interface specification.

3.2.5(b) Worksteps:

Step 1. Define a representative sample of ergonomic issues associated with interfaces. The intent will be to identify issues and potential solutions for issues associated with human machine interfaces.

Step 2. Identify applicable design criteria and guideline. As appropriate, design criteria and guidelines will be proposed.

Step 3. Identify candidate ergonomic design improvements. Candidate improvements to interfaces will be developed for each issue from Step 1 using the applicable design guidance from Step 2. Where required, two or three candidates could be developed for each issue. Definition of candidate improvements will require bridge personnel input.

Step 4. Select ergonomic design improvement. Candidate improvements from Step 3 will be compared on the basis of cost, expected effectiveness and breadth of application on future vessels. The set of recommended improvements will be selected using these data.

Step 5. Design and document improvements. The selected design improvements from Step 4 will be designed in detail and documented using descriptions, specifications and graphics sufficiently that they can be implemented.

Step 6. Develop human-machine interface specification. The applicable design criteria and guidelines will be incorporated into an interface specification document suitable for future use in vessel design. Applicable design criteria from Step 2 will be incorporated and the documentation of the specific improvements from Step 5 will be included to provide examples.

3.2.6(c) Products. The primary products of this task will be the selected improvement concepts and designs from Step 5 and the human-machine interface specification from Step 6.

3.2.7 Sample Process for Improvement of Training (individual and team)

3.2.7(a) Objectives. The objectives of this task are as follows:

i) Identify jobs and tasks for improved training methods.

ii) Develop training objectives/conduct task analysis

iii) Identify performance and skill requirements

iv) Identify training media

v) Develop training materials

vi) Train to criteria and test skill acquisition

3.2.7(b) Worksteps:

Step 1. Identify Jobs and Tasks for Improved Training Methods. Criteria for selection of jobs and tasks will include the frequency with which the tasks must be performed, the likelihood of human error and the severity of the consequences of errors. Tasks that must be performed frequently in daily operations provide opportunities for effective on-the-job training and for extensive practice. Many error modes that exist currently are readily detectable and correctable by bridge personnel and errors on these tasks have little or no consequences. It is infrequently-performed, non-detectable and non-correctable error modes that will drive the selection of tasks for improved training.

Tasks that have the properties of infrequent performance and severe consequences of error are often those associated with emergency response to equipment failures or other abnormal events. The facts that performance is infrequent means that knowledge and skills associated with these tasks are "degradable" over time.

Results of Failure Modes and Effects Analyses (FMEA) or other analysis will be required in this task. The target tasks would then be those necessary to recover from or to mitigate the results of credible events postulated in the FMEA.

Step 2. Develop Training Objectives and Conduct Training Task Analysis. Training objectives describe observable and verifiable behaviors that bridge personnel should exhibit given necessary information. Training objectives usually involve making correct decisions and taking correct actions following receipt of information about the system, the environment, etc. As related to FMEA events, the decisions involved would be to correctly diagnose the state of the equipment and the environment. The action should be the correct one to rectify or mitigate the effects of the failure or abnormal event that has occurred. A training task analysis should be conducted to identify:

i) Tasks, conditions, events and information required by the persons on watch duty

ii) Decisions and actions required of the persons on watch duty and other relevant task descriptors

iii) Needed knowledge and skills to enable performance of the task.

This is also sometimes called a "Critical Task Analysis" in that the focus is on the highly important tasks rather than on all tasks. Critical tasks, then, do not necessarily result only from major failures but also from abnormal events that call for critical tasks to be performed. Training objectives will be defined for the tasks identified in Step 1.

Step 3. Identify Performance and Skill Requirements. Performance refers to measurement of trainee progress in demonstrating mastery of the training objectives. This can range from an indication that the trainee has completed a given module to performance in problem solving exercises or simulations. The intention of any training program is to impart Knowledge, Skills and Abilities (KSAs). In some cases, these elements can be treated separately in that knowledge acquisition often involves presentation of factual knowledge and testing involves assessment of acquisition. Skills and abilities usually refer to application of knowledge to problem solving. Certain skills and knowledge may be common across a number of jobs so it may be effective to split out bodies of training materials into modules. Training for a given job then consists of common modules required for the job and job specific modules. Skills, knowledge and performance measurement requirements will be identified. Specific criteria for pass/fail thresholds should be specified.

Step 4. Identify Training Media. Training media can be books, simulators, embedded training incorporated into bridge applications software, desktop simulations, etc. Based on the outputs of Step 3, a preferred medium or media will be identified for each training objective and the performance measurement necessary to assess mastery of the objective.

Step 5. Develop Training Materials. Training materials include the paper, slides, graphics, tapes, computer presentations and other audio and/or visual elements viewed or heard by the student. Training materials will be developed by:

i) Preparation of an outline for each module

ii) Preparation of written contents using subject matter expert inputs

iii) Development of a story board for each module

iv) Preparation of the materials including text, graphics, animations, simulations, etc.

v) For computer based training, development of courseware (using course authoring software where necessary)

Step 6. Train to Criteria and Test Knowledge Skill Acquisition. The initial application of the training content and materials from the above steps will be tested in the training course(s). Performance measures will be used to identify common errors or failures to master material on the part of students and to determine how to modify the training materials. Following any necessary modifications, the resulting course(s) will then be ready to be used to train the required audience.

3.2.7(c) Products. The primary products of this task will be the training materials (courses, manuals, CDs, etc.).

3.2.8 Verification of Human Performance on Existing Systems

Table 2, below, presents a listing of potential verification measures of human performance.

TABLE 2
Potential Verification Measures of Human Performance on Existing System

Evaluate the Assigned Role of the Human in Automation • Verify that each function is allocated to human or machine or a combination of the two. • Verify that the roles of the machine in manual tasks are defined. • Verify that the roles of the human in automated tasks are defined. • Determine that bridge personnel workload is realistic.
Evaluate Training Concepts • Verify that the training analysis addresses training requirements based on job requirements. • Verify that the training analysis addresses all requirements for training devices, trainers and part task and full task simulators. • Verify that training requirements are identified in time to allow for development of any new training devices (such as simulators). • Verify that the analysis addresses lessons learned from similar system training evaluations.
Evaluate Training Concepts • Verify training requirements include specific knowledge and skills to be acquired. • Verify training requirements include criteria for judging skills to be learned. • Verify that training requirements include performance and competence measures.
Evaluate Human Machine-Interface Requirements *Evaluate Human-Machine Interface Design* • Verify that standardization and commonality are addressed in the design of human-machine interfaces. • Verify that unique human interface requirements, documentation needs and special software certifications are identified. • Verify that characteristics of automated decision support systems are identified. • Verify that human workloads and human performance requirements are assessed through human performance and task modeling, task network simulation and human-in-the-loop simulation. • Verify that human engineering design standards are applied to reduce human error potential.
Evaluate Design for Usability • Have information requirements been identified? • Have major deficiencies been identified that might compromise understandability or effectiveness of the proposed displays? • Have bridge personnel needs been identified? • Is the design of human-computer interfaces complete?
Evaluate Design for Operability • Verify bridge personnel performance capability has been demonstrated. • Verify that details of the design are consistent with standards. • Verify that error likelihood analyses have been performed to identify types of performance errors associated with the design approach. • Verify that operational procedures have been developed. • Verify that control and display arrangements are based on sequence of use, priority and functional grouping. • Verify that panels and consoles are designed to be maintainable. • Verify that warnings are provided for hazardous operations/maintenance actions. • Verify that panels are operable when bridge personnel are wearing protective clothing. • Verify that work environment effects (e.g., noise, lighting, climate) have been considered in the design.

Evaluate Communications Concepts • Verify that sufficient communication devices and systems have been provided for all communication requirements. • Verify that communications system designs are based on link analyses and operational sequence analyses. • Verify that speech intelligibility evaluations have been conducted. • Verify that message samples, noise conditions and device fidelity are acceptable in terms of standards. • Verify that messages are standardized and are based on constrained language, controlled syntax and restricted vocabulary. • Verify that bridge personnel clothing conditions were considered. • Verify that the range of potential environments (especially noise and vibration) was considered in design of communications.
Evaluate Design for Habitability • Have facility human functions and associated facility requirements been identified? • Has the design effort identified access safety requirements? • Have requirements for inhabiting the facility been identified? • Verify that environmental controls are included in facilities (e.g., noise, lighting climate).
Evaluate Design for Maintainability • Does design for maintainability include requirements for maintenance information requirements? • Does design for maintainability include design for accessibility? • Does design for maintainability include equipment arrangement to facilitate maintenance? • Does design for maintainability include procedures-number and simplicity? • Does design for maintainability include troubleshooting diagnostics and decisions? • Does design for maintainability include builtin test and automatic test equipment? • Does design for maintainability include requirements and approaches for tools and test sets? • Does design for maintainability include requirements and approaches for equipment identification and marking?
Evaluate Design for Safety • Have hazards previously identified been eliminated or the associated risks reduced to an acceptable level? • Are approaches for guarding the hazard adequate? • Are approaches for labeling the hazard adequate? • Are approaches for alarming the hazard adequate? • Are approaches for safety training/procedures adequate?
Evaluate Installations • Have equipment location requirements been identified? • Has space layout for equipment installation been identified? • Have equipment configuration requirements been identified? • Have access/egress requirements been identified? • Has a design evaluation been conducted?
Evaluate inputs to Engineering Change Proposals (ECP) • Have lessons learned been identified for the element? • Have critical tasks per function been identified? • Have human-machine interfaces been identified? • Have task requirements been identified and analyzed? • Have test and evaluation been conducted to identify problems and/or validate lessons learned data? • Has the role of human vs. automation been evaluated? • Have workloads been evaluated? • Have procedures been evaluated? • Have effects-of-use environments been evaluated?

This Page Intentionally Left Blank

APPENDIX 2 Glossary

Accessibility: The ability for personnel to easily access equipment that requires maintenance, inspection, removal or replacement while wearing the appropriate clothing, including personal protective equipment and using all necessary tools and test equipment.

Achromatic: Designating color perceived to have zero saturation and therefore no hue, such as neutral grays, white or black.

Alarm: A visual and/or audible signal indicating an abnormal situation.

Annunciation: An audible signal indicating a condition or system state (usually of an emergency or off-normal nature).

Anthropometric Percentile: Given the range of variability of [human] bodily dimensions, anthropometric data are typically expressed as percentile statistics, such as 5th or 95th percentile. A percentile statistic defines the anthropometric point at which a percentage of a population falls above or below that value. For example, the seated eye height of a 95th percentile North American male is 853 mm (33.5 inches), so by definition, 5 percent of North American males will have a seated eye height of greater that this figure and 95 percent will have a lesser seated eye height.

Anthropometrics: Data relating to physical body dimensions. It includes body characteristics such as size, breadth and the distances between anatomical landmarks, such as elbow to fingertip

Ascenders/Descenders: The point size of a given font is measured from the top of the font's ascenders to the bottom of its descenders. The ascender is the measurement from the top of the lowercase letter to the top of the uppercase letter. The descender is measured from the bottom of the uppercase letter to the bottom of the lowercase letter.

Aspect Ratio: The ratio of the font size (measurement from the baseline to the top of the uppercase letters) to the x-height (measurement from the baseline to the top of the lowercase letters).

Bridge Wing: Parts of the bridge on both sides of the vessel's wheelhouse that extend to the vessel's sides.

Bridge: Area from which the navigation and control of the vessel is exercised, including wheelhouse, chartroom area and bridge wings.

Catwalk: Extension to a deck that is wide enough to allow the passage of a person.

Chartroom Area: Part of the wheelhouse situated and equipped for adequate performance of voyage planning/plotting activities.

CIE: Commission Internationale de l'Eclairage (CIE) is an international organization that focuses on lighting.

Coding: Coding refers to a system of sensory stimuli used to represent specific information. There are a number of mechanisms for coding information. These include, but are not limited to:

i) Audible through pitch, frequency and modulation

ii) Visual through color and shape

iii) Tactile through shape and texture.

Commanding View: View without obstructions that would interfere with the ability of a navigator to perform all immediate tasks.

Communications Workstation: Workstation for operation and control of the equipment for distress/safety communications and public correspondence communications.

Communications: Design for clear, reliable and understandable internal to vessel, vessel-to-vessel and vessel-to-shore voice communications.

Conning Position: Place on the bridge with a commanding view that is used by navigators when commanding, maneuvering and controlling a vessel's movements.

Console: Structural framework for the integration of devices, equipment and storage that together comprise a workstation.

Control: A device bridge personnel use to input a signal to a display or to change the operating status of the equipment or system.

Dark Adaptation: Dark adaptation is the process by which the human eye adjusts to lower levels of illumination through increased sensitivity to light. Visual function in very dim light has the following characteristics:

i) Visual detail is significantly reduced

ii) The eye becomes more sensitive to blue light

iii) Foveal visual performance degrades significantly, while peripheral vision becomes dominant.

dB(A): Sound level in decibels, measured using A-weighting. The use of A-weighting causes the frequency response of sound level measurement devices to mimic that of the human ear, where response is maximum at about 2KHertz, less at very low or very high frequencies. A-weighted measurements correlate well with measures of speech interference and judgments of loudness.

Display: Means by which a device presents visual information to the navigator, including conventional instrumentation.

Effective Temperature: An index that combines into a single value the effect of temperature, humidity and air movement on the sensation of warmth or cold. The numerical value is that of the temperature of still, saturated air that would induce an identical sensation to the human body.

Error Control: Exercising control over the probability, frequency, criticality and recoverability of human errors that may occur.

Expectation: A belief about or mental picture of the future. In ergonomic contexts, an expectation is a belief concerning the effect of an action, especially a control action.

Field of View: Angular dimension of a scene that can be observed from a position on the vessel's bridge.

Function: The appropriate action of any special components or part of a system to meet some defined purpose or objective; specific occupation or role; an assigned duty or activity.

Glare: Glare is the sensation produced by luminance within the visual field that is sufficiently greater than the luminance to which the eyes are adapted causing annoyance, discomfort or loss of visual performance and visibility. Glare is experienced if windows or light sources, seen directly or by reflection in shiny surfaces, are too bright compared to the general brightness within the interior of the bridge.

Grab-rails: Hand grabs mounted to bridge surfaces that are used to help negotiate awkward accesses.

Habituation: The reduction of a task performance likelihood following repeated false exposures to the stimulus (e.g., an oft repeated false alarm will reduce its ability to command a timely response).

Handrails: Rails mounted along passageways, ladder ways, etc., that are used to safely negotiate spaces and work areas.

Helmsman: Person who steers a vessel while underway.

Human Task: A piece of work assigned or done as part of one's duties; a function to be performed; an objective.

Icon: A graphical representation of an object or function. A graphic symbol.

Illuminance: The amount of light falling on an object or surface. Illuminance is measured using units of Lux (lm/m^2) or foot-candles (fc; lm/ft^2). One foot-candle equals 10.76 Lux.

Labels: Within the context of these Guidance Notes, the terms "labels" and "labeling" refer to the descriptors used to identify controls, displays and other components on the navigation bridge and not to the internal components of displays such as meter scales or fields in a computer display.

Layout: Physical arrangement of the parts and components that make up a module or a unit of equipment.

Luminance: The amount of light emitted from a source (including that reflected from a surface). Luminance is measured in candela-per-square meter (cd/m^2).

Maintainability: The ability to carry out rapid and effective system restoration to maintain the equipment at a specified level of performance.

Maintenance of Situation Awareness: Persons on watch duty understanding of the condition of equipment, hull performance, sea and weather conditions, hazards to navigation, crew capabilities and presence and intentions of other occupants of the waterways.

Maintenance: All activities necessary to keep equipment in or restore it to a specified level of performance.

Monitoring Workstation: Workstation where formal vessel monitoring activities are performed.

Monitoring: Act of constantly checking equipment and surroundings in order to detect changes.

Nanometer: One billionth of a meter.

Navigation and Maneuvering Workstation: Workstation where vessel's speed and course are considered and controlled.

Navigator: Person navigating, operating bridge equipment and maneuvering the vessel.

Non-saturated Colors: Saturation in color usage refers to the degree that a hue differs from a gray of the same lightness. Therefore, a non-saturated color is closer to gray and appears washed out.

Occupational Safety: The science of preventing individuals from being injured or contracting diseases in the course of their work.

Parallax: An apparent change in the direction of an object, caused by a change in observational position that provides a new line of sight.

Perception: The process of becoming aware of the immediate environment through any of the senses.

Reflectance: The amount of light that is reflected (bounced back) from a surface.

Situation Awareness: The degree of accuracy by which one's perception of the current environment mirrors reality.

Staffing Levels: The number of crew who will staff the bridge during operations. This addresses bridge workload, both immediate (number of tasks that must be performed in a short period of time) and ongoing (work done over the course of a voyage). This also addresses bridge personnel fatigue.

Stroke Width: The width of the line that defines the font.

Synthesized Speech: Machine-generated speech that is produced by a voice synthesizer.

Task-based Design: Design of interfaces based on the complexity, sequence, importance and error tolerance of tasks performed on the bridge.

Visual Display: A device that provides readings, status or conditions of machinery, equipment or systems operating parameters.

Warning: A cautionary or deterrent indication of an impending abnormal situation.

Wheelhouse: Enclosed area of the bridge.

Whole Body Vibration: Mechanical vibration (or shock) transmitted to the human body as a whole. Whole body vibration is often due to the vibration of a surface supporting the body.

Work Schedules: The number of continuous hours and the work shift patterns performed by bridge persons on watch duty.

Workstation: Position at which one or several tasks constituting a particular activity are carried out. This position includes a combination of job-related items necessary to fulfill job tasks such as the console with all devices, equipment and furniture.

APPENDIX 3 Acronyms and Abbreviations

ABS	American Bureau of Shipping
ARPA	Automatic Radar Plotting Aid
ATOMOS	Advanced Technology to Optimise Manpower Onboard Ships
BS	British Standard
C	Celsius
CD	Candela
CIE	Commission Internationale de l'Eclairage
CPA	Closest Point of Approach
CRT	Cathode Ray Tube
dB	Decibel
dB(A)	Decibel with A scale frequency weighting
ECP	Engineering Chang Proposal
F	Fahrenheit
fc	Foot-Candle
FMEA	Failure Modes and Effects Analysis
FMECA	Failure Modes Effects and Criticality Analysis
HMI	Human-Machine Interface
HVAC	Heating, Ventilation and Air Conditioning
Hz	Hertz
IACS	International Association of Classification Societies
IBS	Integrated Bridge System
ILO	International Labor Organization
IMO	International Maritime Organization
in	Inch
ISO	International Organization of Standardization
KSA	Knowledge Skills and Abilities
lm	Lumen
MAIB	Marine Accident Investigation Branch
m	Meter
mm	Millimeter
Nm	Nanometer
VDU	Visual Display Unit
WBV	Whole Body Vibration

This Page Intentionally Left Blank

APPENDIX 4 References

ADULTDATA: The Handbook of Adult Anthropometric and Strength Measurements – Data for Design Safety. Institute for Occupational Ergonomics, University of Nottingham, UK. 1998: Author.

Advanced Technology to Optimise Manpower Onboard Ships. (1994). Task 2309 *Design Requirements for Ship Control Center (Bridge)*.

American Bureau of Shipping. (2000). *Guide for Bridge Design and Navigational Equipment/Systems.* Houston, TX: Author.

American Bureau of Shipping. (2002). *Guide for Crew Habitability on Offshore Installations.* Houston, TX: Author.

American Bureau of Shipping. (2001). *Guide for Crew Habitability on Ships.* Houston, TX: Author.

American Bureau of Shipping. (2001). *Rules for Building and Classing Steel Vessels Under 90 meters (295 feet) in Length.* Houston, TX: Author.

American Bureau of Shipping. (2002). *Rules for Building and Classing* Steel *Vessels*. Houston, TX: Author.

American Bureau of Shipping. (2003). *Guidance Notes on the Application of Ergonomics to Marine Systems.* Houston, TX: Author.

American Society of Testing and Materials. F 1166 (2000). *Standard Practices for Human Engineering Design for Marine Systems, Equipment and Facilities.* West Conshohocken, PA: Author.

Baker, C.C. (1997). Advanced Manning/Human Systems Integration (HSI) for Sealift Ship Technology Development Program (SSTDP). Technical report prepared for John J. McMullen Associates, Inc and the Naval Sea Systems Command.

Boff, Kenneth (Ed.). (1986). *Handbook of Perception and Human Performance, Volume I*. New York: John Wiley and Sons, Inc.

British Standard EN ISO 8468. (1995). *Ship's Bridge Layout and Associated Equipment – Requirements and Guidelines.* London: Author.

Dunnette, M.D. (Ed, 1983). *Handbook of Industrial and Organizational Psychology*. John Wiley and Sons. New York.

IEC 61209. (1999). *Maritime Navigation and Radio Communication Equipment and Systems – Integrated Bridge Systems (IBS) – Operational and Performance Requirements, Methods of Testing and Required Test Results.*

International Association of Classification Societies. (2000). *Recommendation 71: Guide for the Development of Technical Manuals*. London: Author.

International Association of Classification Societies. (1992). *Requirements Concerning Navigation*. London: Author.

International Association of Classification Societies. (2001). *Requirements Concerning Machinery Installations*. London: Author.

International Labor Organization. (1996). *Accident Prevention On Board Ship at Sea and In Port.*

International Maritime Organization. (1972, as amended). *International Regulations for Preventing Collisions at Sea* (Annex III), Rules 6, 7, and 8. London: Author.

International Maritime Organization. (1974). *International Convention for the Safety of Life at Sea* (SOLAS), as amended. London: Author.

International Maritime Organization. (1995). *Code on Alarms and Indicators*. Resolution A.830(19) . London: Author.

International Maritime Organization. (2002). Resolution 918(22) *Standard Marine Communication Phrases. London*: Author.

International Maritime Organization A.343(IX) *Recommendation on Methods of Measuring Noise Levels at Listening Posts*. London: Author.

International Maritime Organization Resolution A.694(17) *General Requirements for Shipborne Radio Equipment Forming Part of the Global Maritime Distress and Safety System (GMDSS) and for Electronic Navigational Aids*. London: Author.

International Maritime Organization Resolution A.468(XII). *Code on Noise Levels on Board Ships*. London: Author.

International Maritime Organization. (2000). *MSC/Circular 982 Guidelines on Ergonomic Criteria for Bridge Equipment and Layout*. London: Author.

International Organization for Standardization, ISO 2412. (1982). *Shipbuilding –Colours of Indicator Lights.* Geneva: Author.

International Organization for Standardization, ISO 3434. (1992). *Ship Building and Marine Structures - Heated Glass Panes for Ships' Rectangular Windows.* Geneva: Author.

International Organization for Standardization, ISO 3904. (1990). *Ship Building and Marine Structures - Clear-View Screens.* Geneva: Author.

International Organization for Standardization, ISO 8864. (1987). *Air Conditioning and Ventilation of Wheelhouse On-Board Ships – Design Conditions and Basis of Calculations.* Geneva: Author.

Karwolski, W., and Marras, W.S. (Eds, 1998). *Occupational Ergonomics Handbook*. CRC Press. Boca Raton.

Kearney, D. (2003). *Ergonomic Analysis: The Fifty Factors*, Job Smart, McMurray, Pa.

Kirwan, B. and Ainsworth, L.K. (1992). *A Guide to Task Analysis*. Taylor and Francis, LTD. London.

Marine Accident Investigation Branch (MAIB) Annual Report 1999. Retrieved November 2, 2001 from http://www.maib.detr.gov.uk/ar1999/04.htm.

Meister, D. (1985). *Behavior Analysis and Measurement Methods*. John Wiley and Sons. New York.

O'Neil, W.A. (2001). *The Human Element in Shipping*. Keynote Address, Biennial Symposium of the Seafarers International Research Centre, Cardiff, Wales, 29 June 2001.

Rea, Mark S. (Ed.) (1999). *IESNA lighting handbook* (9th ed.). New York: Illuminating Engineering Society of North America.

Salvendy, G. (Ed.). (1997). *Handbook of Human Factors and Ergonomics* (2nd Edition). New York: John Wiley and Sons, Inc.

Thomas J., Baker, C.C., Malone, T.B., Malone, J., Hard, C.L., Rezende, I.C.L., Caruana, S., and Witten, M. (2002). *Application of Human Factors Engineering in Reducing Human Error in Existing Offshore Systems*, presented at the 2nd International Workshop on Human Factors in Offshore Operations.

Wieringa, D., Moore, C., and Barnes, V. (1990). *Procedure Writing: Principles and Practices*. Battelle Press, Columbus Ohio.

Woodson, W.E., Tillman, B., and Tillman, P. (1992). *Human Factors Design Handbook*, Second Edition. McGraw-Hill, Incorporated. New York.

This Page Intentionally Left Blank

Guidance Notes on the Ergonomic Design of Navigation Bridges

We value your opinion regarding the *Guidance Notes on the Ergonomic Design of Navigation Bridges*. Your input will be helpful for the future development of this document and other ABS Publications. After you have had an opportunity to review these Guidance Notes, we would be grateful if you would take a few moments to complete and return this form.

Your assessment of these Guidance Notes:

1) Are the ergonomics criteria or other guidance in these Guidance Notes presented in a clear, concise manner? **Yes** **No**

2) Does the content of these Guidance Notes adequately address your needs? **Yes** **No**

3) Is the format, layout, and presentation of the ergonomic criteria contained in these Guidance Notes well presented, clear, and readable? **Yes** **No**

4) If you answered no to any of the above questions, please explain why and suggest improvements (please use additional space if necessary):_____
_____
_____
_____

5) Are there any ergonomics topics, which were not addressed in these Guidance Notes that you would like to have addressed in future revisions? _____
_____
_____
_____

Please tell us about yourself (or affix your business card):

1) Name:_____

2) Job Title/Function:_____

3) Company:_____

4) Type of Business:_____

5) Address:_____

6) Telephone and Fax Number:_____

7) Email Address:_____

If you would like additional copies of these Guidance Notes, they can be downloaded from the ABS Internet site at http://www.eagle.org/rules/downloads.html . Select Publication 119 - *Guidance Notes on the Ergonomic Design of Navigation Bridges*.

Please feel free to contact us with any comments, questions, or concerns regarding these Guidance Notes, and thank you very much for your time.

Safety Assessment and Human Factors Department
ABS Plaza
16855 Northchase Drive
Houston, TX 77060-6006

Phone: 1-281-877-6576
Fax: 1-281-877-5820
Email: ergo@eagle.org

This Page Intentionally Left Blank