GUIDE FOR BUILDING AND CLASSING

VESSELS INTENDED TO CARRY WATER

NOVEMBER 2005

Introduction

This Guide for Building and Classing Vessels Intended to Carry Water was developed for the class notation, **Water Carrier***, which will be assigned to a vessel specifically fitted for the carriage of water cargo in tanks.*

In view of the nature of the intended cargo, double hull tanker structures are not required. The requirements for hull construction and arrangements are to refer to the Annex to the Guide. The remaining parts of this Guide refer to the current ABS Rules for Building and Classing Steel Vessels.

The requirements in this Guide are primarily applicable for new construction, but also apply for an existing tanker intended to change trading and class notation to **Water Carrier***. The Condition Assessment Program ("CAP") that evaluates the quality of older existing tankers is available at the request of the owner prior to reassignment of the class notation.*

1 General

1.1 Classification

In accordance with 1-1-3/3 of the ABS *Rules for Conditions of Classification (Part 1)*, the classification ✠ **A1 Water Carrier** is assigned to vessels specifically designated and fitted for the carriage of water and built to the requirements of this Guide and other relevant sections of the Rules.

1.3 Application

The requirements of this Guide are applicable to a tanker intended for the carriage of water in addition to the relevant requirements for hull structures, equipment and vessel systems in the *Steel Vessel Rules* and the Annex to this Guide. Due regard is to be given to the requirements of the Flag State and the Port State for the carriage of potable water for such aspects as suitability of tank coating or piping system materials.

1.5 Scope

This Guide is intended to cover the specific requirements for the class notation, **Water Carrier**, for the transport of potable water or industrial fresh water.

3 Plans

In addition to the plans required to be submitted by 1-1-7/1 of the ABS *Rules for Conditions of Classification (Part 1)* and 4-1-1/5 of the ABS *Rules for Building and Classing Steel Vessels (Steel Vessel Rules)*, the following plans are to be submitted in the same manner.

3.1 Hull Plans

Cargo tank arrangements and details

Cargo tank construction and material details

Details of cargo tank coatings

3.3 Machinery Plans

Cargo pumping arrangements

Cargo tank stripping system

Cargo tank venting system

Cargo tank washing system

Cargo tank water level monitoring system

5 Subdivision and Stability

The subdivision and stability of the water carrier is to be in accordance with the requirements of Part 3, Chapter 3 of the *Steel Vessel Rules* applicable to a cargo vessel. Due to the nature of the cargo, MARPOL damage stability and segregated ballast tanks requirements are not applicable.

7 Materials

The materials used are to be in accordance with the ABS *Rules for Materials and Welding (Part 2)* and the following:

i) Materials used for the construction of the cargo containment; and the associated piping, pumps and valves are to be compatible with water cargo. Details of the materials are to be submitted for review. In general, the following materials are considered to be acceptable for the corresponding application.

- *Cargo pipe, fitting and cargo monitoring instruments inside cargo tank:* Stainless steel or ordinary steel with galvanizing or with plastic coating, or GRP.
- *Cargo Pumps, Pump Casing:* FCD 400(JIS G5502)
- *Pump Shaft and Impeller:* SCS 13 or 14 (JIS G5121)

ii) The use of non-metallic materials for the cargo piping system will be the subject of special consideration.

iii) The coating is to be non-toxic and non-conductive to bacteria growth. The coating is to be in accordance with the ABS *Guidance Notes on the Application and Maintenance of Marine Coating System*.

9 Hull Structure

The scantlings and arrangements of the hull structure are to be in accordance with the requirements of the Annex to this Guide. Cofferdams are required for segregation of water cargo from other liquids, such as oil products required for operation of the vessel (e.g., common boundaries with fuel tanks).

Cargo tanks are in general to be completely filled. Special consideration may be given to the scantlings of cargo tanks intended to be partially filled with water. The loading particulars are to be submitted.

11 Cargo Containment System

11.1 Cargo Tanks

Cargo tanks are to be designed and constructed in accordance with the applicable requirements in the Annex to this Guide.

If the vessel will be operated in cold weather where freezing of water is expected, protection from freezing is to be provided in the cargo tanks.

13 Cargo Loading and Unloading System

13.1 Cargo Piping

13.1.1

A cargo loading and unloading system is to be permanently installed. There are to be a minimum of two pumps capable of taking suction from each cargo tank. Where submersible pumps are used, only one cargo pump per tank may be used provided that an alternative method of pumping cargo is available on board the vessel.

13.1.2

Means are to be provided for isolation of each cargo tank in the loading and unloading lines.

13.1.3

Pipes, valves and the fittings in the cargo system are to comply with the requirements of Part 4, Chapter 6 of the *Steel Vessel Rules*.

13.1.4

Means such as the drain valve fitted at the lower side of the cargo pipe are to be provided to effectively drain the cargo piping systems.

13.1.5

Means for cargo sampling at the cargo manifold and on the cargo tanks are to be provided. Hatch covers can be used for the cargo sampling inside cargo tanks.

13.1.6

If the vessel will be operated in cold weather where freezing of water is expected, means of protection from freezing is to be provided for the deck cargo piping system such that the ability to load and unload the water cargo can be regained. The means for the protection may be heat tracing and/or heat insulation.

13.3 Cargo Pumps

Where the cargo unloading is through cargo pumps other than submersible pumps, they are to be accessible for maintenance and repair.

15 Ancillary Systems

15.1 Cargo Tank Sounding Arrangements

Cargo tanks are to be provided with means for assessing the liquid levels in the tanks. Where permanent sounding arrangements are provided, remote level indicating is to be provided in the cargo control room.

When the air bubbling type level gauging system is installed in the cargo tank, the air is from the weather with suction strainer. The air pumping system is to be such that the air will not be contaminated by the air pump lubricant.

15.3 Cargo Tank Vent

Tank vents are to comply with 4-6-4/9 of the *Steel Vessel Rules*.

An insect screen is to be provided for each vent outlet.

15.5 Ballast System Arrangement

A permanently installed ballast system is to be provided. This system need not be independent of the ballast system required by Part 4, Chapter 6 of the *Steel Vessel Rules*.

Where the vessel will be operated in cold weather where freezing of water is expected, protection from freezing in the ballast tanks is to be provided. The means of protection may be by heating coil or air bubbling system.

15.7 Tank Washing System

For vessels intended to carry seawater ballast on the return voyage, a tank washing system is to be provided. Tank washing may be conducted by manual means or fixed tank cleaning machine with fresh water. The cargo pump or cargo/ballast pump may be used for tank cleaning purposes. The fresh water pump and pipelines to be used for the seawater ballast purpose are to be effectively washed by the fresh water.

15.9 Remote and Automatic Cargo Control System

Cargo and ballast pumps and the valve remote control system are to be operable at the cargo control room. A local means of emergency operation for the valve remote control system is to be provided.

17 Tests and Inspections

Tests and inspection of the vessel and its machinery are to be in accordance with applicable Sections of the *Steel Vessel Rules*.

17.1 Inspection for Corrosion

Periodical inspection for the corrosion of cargo containment is to be carried out.

17.3 Test Requirements for Tanks and Boundaries

Test requirements for tanks and boundaries are to be in accordance with Section 3-7-1 of the *Steel Vessel Rules*, with the modification of hydrostatic testing head to the top of overflow or 2.4 m above top of tank, whichever is the greater.

ANNEX

SECTION 1 Introduction

1 General

1.1 Application

1.1.1 Structural Arrangement

The requirements contained in this Section are intended to apply to longitudinally framed, all-welded tank vessels having proportions in accordance with 3-1-2/7 of the *Steel Vessel Rules*, machinery aft and two or more continuous longitudinal bulkheads. Where the arrangement differs from that described, the scantlings may require adjustment to provide equivalent strength.

1.1.2 Engineering Analysis

It is recommended that compliance with the following requirements be accomplished through a detailed investigation of the magnitude and distribution of the imposed longitudinal and transverse forces by using an acceptable method of engineering analysis. The following paragraphs are to be used as a guide in determining scantlings. Where it can be shown that the calculated stresses using the loading conditions specified in A-2/13.5 are less than those stated to be permissible, consideration will be given to scantlings alternative to those recommended by this Section.

1.3 Detail Design of Internal Members

The detail design of internals is to follow the guidance given in 3-1-2/15 of the *Steel Vessel Rules*.

See also Appendix A-A1 entitled, "Guide for Hull Girder Shear Strength for Tankers".

1.5 Breaks

Special care is to be taken throughout the structure to provide against local stresses at the ends of the cargo spaces, superstructures, etc. The main longitudinal bulkheads are to be suitably tapered at their ends, and effective longitudinal bulkheads in the poop are to be located to provide effective continuity between the structure in way of and beyond the main cargo spaces. Where the break of a superstructure lies within the midship 0.5L, the required shell and deck scantlings for the midship 0.4L may be required to be extended to effect a gradual taper of structure, and the deck stringer plate and sheer strake are to be increased. See A-2/3.3 and A-2/5.1. Where the breaks of the forecastle or poop are appreciably beyond the midship 0.5L, the requirements of A-2/3.3 and A-2/5.1 may be modified.

1.7 Variations

Tankers of special type or design differing from those described in the following Rules will be specially considered on the basis of equivalent strength.

1.9 Loading Guidance

Loading guidance is to be as required by 3-2-1/7 of the *Steel Vessel Rules*.

1.11 Higher-strength Materials

In general, applications of higher-strength materials are to meet the requirements of this Section, but may be modified generally as outlined in the following sections of the *Steel Vessel Rules*:

Section 3-2-4 for longitudinals

Section 3-2-7 for longitudinals

Section 3-2-8 for deep longitudinal members (3-2-8/9.3)

Section 3-2-10 for bulkhead plating

Section 3-2-2 for shell plating

Section 3-2-3 for deck plating

In such cases, the allowable shearing stresses will be specially considered.

1.13 Protection of Structure

For the protection of structure, see 3-2-18/5 of the *Steel Vessel Rules*.

1.15 Tank Design Pressures

The requirements of this section are for tanks intended for the carriage of liquid cargoes with specific gravities not greater than 1.05. Where the specific gravity is greater than 1.05, the design heads, *h*, are to be increased by the ratio of specific gravity to 1.05.

3 Special Requirements for Deep Loading

Where a vessel is intended to operate at the minimum freeboard allowed by the International Convention on Load Lines, 1966, for Type-A vessels, the conditions in A-1/3.1 through A-1/3.9 are to be complied with.

3.1 Machinery Casings

Machinery casings are normally to be protected by an enclosed poop or bridge, or by a deckhouse of equivalent strength. The height of such structure is to be at least 1.8 m (5.9 ft) for vessels up to and including 75 m (246 ft) in length, and 2.3 m (7.5 ft) for vessels 125 m (410 ft) or more in length. The minimum height at intermediate lengths is to be obtained by interpolation. The bulkheads at the forward ends of these structures are to be of not less scantlings than required for bridge-front bulkheads (see 3-2-11/3 of the *Steel Vessel Rules*). Machinery casings may be exposed, provided that they are specially stiffened and there are no openings giving direct access from the freeboard deck to the machinery space. A door complying with the requirements of 3-2-11/5.3 of the *Steel Vessel Rules* may, however, be permitted in the exposed machinery casing, provided that it leads to a space or passageway which is as strongly constructed as the casing and is separated from the engine room by a second door complying with 3-2-11/5.3 of the *Steel Vessel Rules*. The sill of the exterior door is not to be less than 600 mm (23.5 in.), and of the second door not less than 230 mm (9 in.).

3.3 Access

Satisfactory arrangements are to be provided to safeguard the crew in reaching all parts used in the necessary work of the vessel. See 3-2-17/3 of the *Steel Vessel Rules*.

3.5 Hatchways

Exposed hatchways on the freeboard and forecastle decks or on the tops of expansion trunks are to be provided with effective watertight covers of steel. The use of material other than steel will be subject to special consideration.

3.7 Freeing Arrangements

Tankers with bulwarks are to have open rails fitted for at least half the length of the exposed parts of the freeboard and superstructure deck or other effective freeing arrangements. The upper edge of the sheer strake is to be kept as low as practicable. Where superstructures are connected by trunks, open rails are to be fitted for the whole length of the exposed parts of the freeboard deck.

3.9 Flooding

Attention is called to the requirement of the International Convention on Load Lines, 1966, that tankers over 150 m (492 ft) in freeboard length (see 3-1-1/3.3 of the *Steel Vessel Rules*) to which freeboards less than those based solely on Table B are assigned must be able to withstand the flooding of certain compartments.

3.11 Ventilators

Ventilators to spaces below the freeboard deck are to be specially stiffened or protected by superstructures or other efficient means. See also 3-2-17/9 of the *Steel Vessel Rules*.

5 Arrangement

5.1 Subdivision

The length of the tanks, location of expansion trunks, and position of longitudinal bulkheads are to be arranged to avoid excessive dynamic stresses in the hull structure.

5.3 Cofferdams

Cofferdams, thoroughly watertight and vented, having widths as required for ready access, are to be provided for the separation of all cargo tanks from other liquids.

5.5 Cathodic Protection

5.5.1 Anode Installation Plan

Where sacrificial anodes are fitted in ballast tanks, their material, disposition and details of their attachment are to be submitted for approval.

5.5.2 Anode Attachment

Anodes are to have steel cores sufficiently rigid to avoid resonance in the anode support and are to be designed to retain the anode even when it is wasted.

The steel cores are to be attached to the structure by means of continuous welds at least 75 mm (3 in.) in length. Alternatively, they may be attached to separate supports by bolting. A minimum of two bolts with locknuts are to be used.

The supports at each end of an anode are not to be attached to items of structure which are likely to move independently.

Anode inserts and supports welded directly to the structure are to be arranged so that the welds are clear of stress raisers.

5.7 Structural Fire Protection

The applicable requirements of Section 3-4-1 of the *Steel Vessel Rules* are to be complied with.

5.9 Allocation of Spaces

5.9.1 Tanks Forward of the Collision Bulkhead

Tanks forward of the collision bulkhead are not to be arranged for the carriage of oil or other liquid substances that are flammable.

5.11 Access to Upper Parts of Ballast Tanks on Double Hull Tankers

Where the structural configuration within the ballast tank is such that it will prevent access to upper parts of tanks for required close-up examination (see 7-3-2/5.13.3 of the ABS *Rules for Survey After Construction (Part 7)*) by conventional means, such as a raft on partly filled tank, permanent means of safe access is to be provided. The details of access are to be submitted for review.

Where horizontal girders or diaphragm plates are fitted, they may be considered as a part of permanent access. Alternative arrangements to the above may be considered upon submission.

5.13 Access to All Spaces in the Cargo Area

Access to cofferdams, ballast tanks, cargo tanks and other spaces in the cargo area is to be direct and from the open deck. Access to double bottom spaces may be through a cargo pump room, deep cofferdam, pipe tunnel or similar space, provided ventilation is suitable.

For access through horizontal openings, hatches or manholes, the access is to be of a size such as to allow a person wearing a self-contained, air-breathing apparatus and protective equipment (see 4-7-3/15.5 of the *Steel Vessel Rules*) to ascend or descend any ladder without obstruction and also to provide a clear opening to facilitate the hoisting of an injured person from the bottom of the space. In general, the minimum clear opening is not to be less than 600 mm (24 in.) by 600 mm (24 in.).

For access through vertical openings or manholes providing passage through the length and breadth of the space, the minimum clear opening is not to be less than 600 mm (24 in.) by 800 mm (32 in.) at a height of not more than 600 mm (24 in.) from the bottom shell plating, unless gratings or other footholds are provided.

For vessels less than 5000 tons deadweight, smaller dimensions than above may be approved, provided that the ability to remove an injured person can be demonstrated to the satisfaction of the Surveyor.

5.15 Duct Keels or Pipe Tunnels in Double Bottom

Duct keels or pipe tunnels are not to pass into machinery spaces. Provision is to be made for at least two exits to the open deck, arranged at a maximum distance from each other. One of these exits may lead to the cargo pump room, provided that it is watertight and fitted with a watertight door complying with the requirements of 3-2-9/9.1 of the *Steel Vessel Rules* and in addition with the following:

i) In addition to bridge operation, the watertight door is to be capable of being closed from outside the main pump room entrance; and

ii) A notice is to be affixed at each operating position to the effect that the watertight door is to be kept closed during normal operations of the vessel, except when access to the pipe tunnel is required.

For the requirements of ventilation and gas detection in duct keels or pipe tunnels, see 5C-1-7/31.17.1 of the *Steel Vessel Rules*.

5.17 Testing

Requirements for testing are contained in Part 3, Chapter 7 of the *Steel Vessel Rules*.

5.19 Machinery Spaces

Machinery spaces aft are to be specially stiffened transversely. Longitudinal material at the break is also to be specially considered to reduce concentrated stresses in this region. Longitudinal wing bulkheads are to be incorporated with the machinery casings or with substantial accommodation bulkheads in the tween decks and within the poop.

This Page Intentionally Left Blank

ANNEX

SECTION 2 Hull Structure

1 Hull Girder Strength

1.1 Normal-strength Standard

The longitudinal hull girder strength is to be not less than required by the equations given in 3-2-1/3.7 and 3-2-1/3.9 of the *Steel Vessel Rules*.

1.3 Still-water Bending Moment Calculations

For still-water bending moment calculations, see 3-2-1/3.3 of the *Steel Vessel Rules*.

3 Shell Plating

3.1 Amidships

Shell plating within the midship 0.4L is to be of not less thickness than is required for longitudinal hull girder strength, or than that obtained from A-2/3.1.1 through A-2/3.1.3.

3.1.1 Bottom Shell Thickness

The thickness t of the bottom shell plating is not to be less than obtained from A-2/3.1.1(a) and A-2/3.1.1(b).

3.1.1(a)

$$t = S(L + 8.54)/(42L + 2318) \quad \text{mm}$$

$$t = S(L + 28)/(42L + 7602) \quad \text{in.}$$

where

S = frame spacing, in mm (in.), but is not to be taken as less than 88% of that given in 3-2-5/1.7 of the *Steel Vessel Rules* or 864 mm (34 in.), whichever is less

L = length of vessel, as defined in 3-1-1/3.1 of the *Steel Vessel Rules*, in m (ft)

Where the bottom hull girder section modulus SM_A is greater than required by 3-2-1/3.7.1 of the *Steel Vessel Rules*, and still-water bending moment calculations are submitted, the thickness of bottom shell may be obtained from the above equation multiplied by the factor, R_b. Special consideration will be given to vessels constructed of higher-strength steel.

$$R_b = \sqrt{\frac{SM_R}{SM_A}} \quad \text{is not to be taken less than 0.85}$$

where

SM_R = hull girder section modulus required by 3-2-1/3.7.1 of the *Steel Vessel Rules*, in cm^2-m (in^2-ft)

SM_A = bottom hull girder section modulus of vessel, in cm^2-m (in^2-ft), with the greater of the bottom shell plating thickness obtained when applying R_n or R_b

3.1.1(b)

$$t = 0.006s\sqrt{0.7d + 0.02(L - 50)} + 2.5 \qquad \text{mm}$$

$$t = 0.00331s\sqrt{0.7d + 0.02(L - 164)} + 0.1 \qquad \text{in.}$$

Where the bottom hull girder section modulus, SM_A, is greater than required by 3-2-1/3.7.1 of the *Steel Vessel Rules*, and still-water bending moment calculations are submitted, the thickness of bottom shell may be obtained from the above equation multiplied by the factor, R_n. Special consideration will be given to vessels constructed of higher-strength steel.

$$R_n = \sqrt{\frac{1}{\frac{f_p}{\sigma_t}\left(1 - \frac{SM_R}{SM_A}\right) + 1}} \quad \text{is not to be taken less than 0.85}$$

where

f_p = nominal permissible bending stress, in kN/cm^2 (tf/cm^2, Ltf/in^2), as given in 3-2-1/3.7.1 of the *Steel Vessel Rules*

σ_t = $KP_t(s/t)^2$, in kN/cm^2 (tf/cm^2, Ltf/in^2)

K = 0.34 for longitudinal framing

P_t = $(0.638H + d)a$ kN/cm^2 (tf/cm^2, Ltf/in^2)

α = 1.005×10^{-3} (1.025×10^{-4}, 1.984×10^{-4})

t = bottom shell plating thickness required by the equation in A-2/3.1.1(b) above, in mm (in.)

H = wave parameter defined in 3-2-2/3.13.2 of the *Steel Vessel Rules*

SM_R and SM_A are as defined in A-2/3.1.1(a) and L, s and d are as defined in A-2/3.1.2(b).

SM_R/SM_A is not to be taken as less than 0.70.

3.1.2 Side Shell Thickness

The thickness t of the side shell plating is not to be less than obtained from A-2/3.1.2(a) and A-2/3.1.2(b).

3.1.2(a)

$t = 0.01L(6.5 + 21/D)$ mm

$t = 0.0003937L(2.0 + 21/D)$ in.

3.1.2(b)

$t = 0.0052s\sqrt{0.7d + 0.02L} + 2.5$ mm

$t = 0.00287s\sqrt{0.7d + 0.02L} + 0.1$ in.

where

L	=	length of vessel, as defined in 3-1-1/3.1 of the *Steel Vessel Rules*
d	=	molded draft to the summer load line, as defined 3-1-1/9 of the *Steel Vessel Rules*, in m (ft)
D	=	molded depth, as defined in 3-1-1/7.1 of the *Steel Vessel Rules*, in m (ft)
s	=	spacing of bottom longitudinals or spacing of side longitudinals or vertical side frames, in m (ft)

3.1.3 Shell Thickness

Where a double bottom is fitted and is not to be used for the carriage of oil, the bottom shell thickness may be in accordance with 3-2-2/3.13 of the *Steel Vessel Rules*, and if a double skin is provided and is not to be used for the carriage of oil, the side shell thickness may be in accordance with 3-2-2/3.9 of the *Steel Vessel Rules*.

3.3 Sheer Strake

The thickness of the sheer strake is to be not less than the thickness of the side-shell plating, nor less than required by A-2/5.1.2. The thickness is to be increased 25% in way of breaks of superstructures, but this increase need not exceed 6.5 mm (0.25 in.). See A-1/1.7.

3.5 Keel Plate

The thickness of the flat plate keel is to be not less than that required for the bottom shell plating at that location increased by 1.5 mm (0.06 in.), except where the submitted docking plan (see 3-1-2/11 of the *Steel Vessel Rules*) specifies all docking blocks be arranged away from the keel.

3.7 Flat of Bottom Forward

Where the heavy weather ballast draft forward is less than 0.04*L*, the plating on the flat of bottom forward of the location in 3-2-4/Table 1 of the *Steel Vessel Rules* is to be not less than required in 3-2-2/5.5 of the *Steel Vessel Rules*. For this assessment, the heavy weather ballast draft forward is to be determined by using segregated ballast tanks only.

3.9 Plating Outside Midship 0.4L

The bottom and side shell, including the sheer strake beyond the midship 0.4*L*, is generally to be in accordance with the requirements of 3-2-2/5 of the *Steel Vessel Rules* and is to be gradually reduced from the midship thickness to the end thickness.

3.11 Vessels under 76 m (250 ft)

In vessels under 76 m (250 ft) in length, the thickness of the bottom shell is to be obtained from 3-2-2/3 of the *Rules for Building and Classing Steel Vessels Under 90 meters (295 feet) in Length*.

3.13 Bilge Keels

Bilge keels are to comply with 3-2-2/13 of the *Steel Vessel Rules*.

5 Deck Plating

5.1 Amidships

The strength deck within the midship 0.4*L* is to be of not less thickness than is required to provide the deck area necessary for longitudinal strength in accordance with A-2/1; nor is the thickness to be less than determined by the following equations for thickness of deck plating.

5.1.1

$$t = 0.0016s\sqrt{L-53} + 0.32\frac{L}{D} - 2.5 \qquad \text{mm}$$

$$t = 0.000883s\sqrt{L-174} + 0.0126\frac{L}{D} - 0.1 \qquad \text{in.}$$

5.1.2

$$t = \frac{s(30.48+L)}{4981+40L} \qquad L \le 152.4 \text{ m}$$

$$t = \frac{s(259.1+L)}{22641+15L} \qquad 152.4 < L \le 305 \text{ m}$$

$$t = \frac{s(L+8.537)}{42L+2318} \qquad 305 < L \le 427 \text{ m}$$

$$t = \frac{s(100+L)}{16339+40L} \qquad L \le 500 \text{ ft.}$$

$$t = \frac{s(850+L)}{74264+15L} \qquad 500 < L \le 1000 \text{ ft}$$

$$t = \frac{s(L+28)}{42L+7602} \qquad 1000 < L \le 1400 \text{ ft}$$

where

t	=	plate thickness, in mm (in.)
s	=	spacing of deck longitudinals, in mm (in.)
L	=	length of vessel, as defined in 3-1-1/3.1 of the *Steel Vessel Rules*, in m (ft)
D	=	molded depth, as defined in 3-1-1/7.1 of the *Steel Vessel Rules*, in m (ft)

The thickness of the stringer plate is to be increased 25% in way of breaks of superstructures, but this increase need not exceed 6.5 mm (0.25 in.). See A-1/1.7. The required deck area is to be maintained throughout the midship 0.4*L* of the vessel or beyond the end of a superstructure at or near the midship 0.4*L* point. From these locations to the ends of the vessel, the deck area may be gradually reduced in accordance with 3-2-1/11.3 of the *Steel Vessel Rules*. Where bending moment envelope curves are used to determine the required hull girder section modulus, the foregoing requirements for strength deck area may be modified in accordance with 3-2-1/11.3 of the *Steel Vessel Rules*. Where so modified, the strength deck area is to be maintained a suitable distance from superstructure breaks and is to be extended into the superstructure to provide adequate structural continuity.

5.3 Vessels under 76 m (250 ft)

In vessels under 76 m (250 ft) in length, the thickness of deck plating is to be obtained from 3-2-3/3 of the ABS *Rules for Building and Classing Steel Vessels Under 90 meters (295 feet) in Length*.

7 Bulkhead Plating

7.1 Plating Thickness

The plating is to be of not less thickness than is required for deep-tank bulkheads by 3-2-10/3 of the *Steel Vessel Rules*, where *h* is measured from the lower edge of the plate to the top of the hatch or to a point located 1.22 m (4 ft) above the deck at side amidships, whichever is greater. The upper strakes are to be increased above these requirements to provide a proper margin for corrosion. It is recommended that the top strake of a complete longitudinal bulkhead be not less than 9.5 mm ($^3/_8$ in.) in vessels of 91.5 m (300 ft) length, and 16 mm ($^5/_8$ in.) in vessels of 213.5 m (700 ft) length, and that the strake below the top strake be not less than 9.5 mm ($^3/_8$ in.) in vessels of 122 m (400 ft) length and 12.5 mm ($^1/_2$ in.) in vessels of 213.5 m (700 ft) in length, with intermediate thicknesses for intermediate lengths.

9 Long or Wide Tanks

9.1 Watertight Bulkheads

In vessels fitted with long tanks, the scantlings of watertight transverse bulkheads in smooth-sided tanks are to be specially considered when the spacing between tight bulkheads, nontight bulkheads or partial bulkhead exceeds 12 m (40 ft) in the case of corrugated-type construction, or 15 m (50 ft) in the case of flat-plate type of construction. Special consideration is to be given to the scantlings of longitudinal watertight bulkheads forming the boundaries of wide tanks. Where the length of the smooth-sided tanks exceeds 0.1*L* or the breadth exceeds 0.6*B*, nontight bulkheads are to be fitted, unless calculations are submitted to prove that no resonance due to sloshing will occur in service.

Alternatively, reinforcements to the bulkheads and decks, without nontight bulkheads, may be determined by an acceptable method of engineering analysis.

9.3 Nontight Bulkheads

Nontight bulkheads are to be fitted in line with transverse webs, bulkheads or other structures with equivalent rigidity. They are to be suitably stiffened. Openings in the nontight bulkhead are to have generous radii and their aggregate area is not to exceed 33%, nor be less than 10% of the area of the nontight bulkhead. Plating is to be of not less thickness than that required by A-2/Table 2. Section moduli of stiffeners and webs may be one half of the requirements for watertight bulkheads in 3-2-9/5.3 and 3-2-9/5.7 of the *Steel Vessel Rules*. Alternatively, the opening ratio and scantlings may be determined by an acceptable method of engineering analysis.

11 Double Bottom Structure

11.1 General

Where a double bottom is fitted, it is generally to be arranged with a centerline girder, or equivalent, and, where necessary, with full depth side girders similar to Section 3-2-4 of the *Steel Vessel Rules*. The arrangements and scantlings of the double bottom structure as given in Section 3-2-4 of the *Steel Vessel Rules* may be used, except where modified by this Section. Increases in scantlings may be required where tanks other than double bottom tanks are designed to be empty with the vessel in a loaded condition. Alternatively, consideration will be given to arrangements and scantlings determined

by an acceptable method of engineering analysis, provided that the stresses are in compliance with A-2/13. Where ducts forming a part of the double bottom structure are used as a part of the piping system for transferring cargo or ballast, the structural integrity of the duct is to be safeguarded by suitable relief valves or other arrangement to limit the pressure in the system to the value for which it is designed.

11.3 Floors and Girders

In general, the thickness of floors and girders is to be as required by Section 3-2-4 of the *Steel Vessel Rules*. Where tanks adjacent to the double bottom are designed to be empty with the vessel in a loaded condition, the floors and girders in the double bottom are to be specially considered. Where the heavy weather ballast draft forward is less than 0.04*L* the fore-end arrangement of floors and side girders is to comply with 3-2-4/13.1 and 3-2-4/13.3 of the *Steel Vessel Rules*.

11.5 Inner Bottom

The thickness of the inner-bottom plating is to be not less than required by Section 3-2-10 of the *Steel Vessel Rules*, with a head to 1.22 m (4 ft) above the deck at side amidships or to the top of the hatch, whichever is greater.

11.7 Inner-bottom Longitudinals

Scantlings for inner-bottom longitudinals are to be not less than required in A-2/15.3, using c = 1.00. Where effective struts are fitted between inner-bottom and bottom longitudinals, the inner-bottom longitudinals are not to be less than required in A-2/15.3, using c = 0.55, or 85% of the requirement in 3-2-4/11.3 of the *Steel Vessel Rules* for bottom longitudinals, using c = 0.715, whichever is greater.

11.9 Bottom Longitudinals

Scantlings for bottom longitudinals are to be not less than required by 3-2-4/11.3 of the *Steel Vessel Rules*. Where effective struts are fitted between bottom and inner-bottom longitudinals, the bottom longitudinals are to be not less than 90% of the inner-bottom longitudinal requirement in A-2/15.3, using c = 0.55, or the requirement in 3-2-4/11.3 of the *Steel Vessel Rules*, using c = 0.715, whichever is greater. Where the heavy weather ballast draft forward is less than 0.04*L*, the flat of bottom-forward longitudinals are to be not less than required by 3-2-4/13.5 of the *Steel Vessel Rules*.

13 Deep Supporting Members

13.1 General

Webs, girders and transverses which support longitudinal frames, beams or bulkhead stiffeners, generally are to be in accordance with the following paragraphs. It is recommended that deep girders be arranged in line with webs and stringers to provide complete planes of stiffness. In vessels without a longitudinal centerline bulkhead or effective centerline supporting member, a center vertical keel having sufficient strength to serve as one line of support is to be provided where centerline keel blocks are used in drydocking operations.

13.3 Section Modulus

Each member is to have a section modulus, *SM*, in cm^3 (in^3), not less than that obtained from the following equation:

$$SM = M/f \quad \text{cm}^3\ (\text{in}^3)$$

where

M = maximum bending moment along the member between the toes of the end brackets as computed by an acceptable method of engineering analysis, in kN-cm (kgf-cm, Ltf-in.)

f = permissible maximum bending stress, as determined from the following table.

Values of f (Ordinary-strength Steel)

	kN/cm^2	kgf/cm^2	Ltf/in^2
Transverse members	13.9	1420	9
Longitudinal members	9.3	947	6

Note: Local axial loads on webs, girders or transverses are to be accounted for by reducing the maximum permissible bending stress.

In addition, the following equation is to be used in obtaining the required section modulus SM.

$$SM = 4.74chs\,\ell_b^2 \quad \text{cm}^3 \qquad\qquad SM = 0.0025chs\,\ell_b^2 \quad \text{in}^3$$

c for bottom and deck transverses as shown in A-2/Figure 1:

= 2.00 for bottom girders, vertical webs on transverse bulkheads, horizontal girders and stringers

= 2.50 for deck girders

c for side transverses and vertical webs on longitudinal bulkheads:

= 1.50 without struts

= 0.85 with one horizontal strut

= 0.65 with two horizontal struts

= 0.55 with three horizontal struts

= Where a centerline longitudinal bulkhead is fitted, the value of c for side-shell transverses and vertical webs on longitudinal wing bulkheads will be subject to special consideration.

Where no struts or other effective supporting arrangements are provided for the wing-tank vertical transverses, the deck transverses in the wing tanks are to have section modulus values not less than 70% of that for the vertical side transverses. In no case are the deck transverses in the wing tank to have less than 70% of the section modulus for the corresponding members in the center tanks.

s = spacing of transverses, or width of area supported, in m (ft)

h = bottom transverses and girders of the depth of the vessel, D, in m (ft)

= side transverses and vertical webs on longitudinal bulkheads, vertical webs on transverse bulkheads and horizontal girders and stringers, the vertical distance, in m (ft) from the center of the area supported to a point located 1.22 m (4 ft) above the deck at side amidships in vessels 61 m (200 ft) in length, and to a point located 2.44 m (8 ft) above the deck at side amidships in vessels 122 m (400 ft) in length and above; for intermediate lengths, intermediate points may be used. The value of h is to be not less than the vertical distance from the center of the area supported to the tops of the hatches, in m (ft). See also 5C-2-1/1.15 of the *Steel Vessel Rules*.

= deck transverses and girders, in m (ft), is to be measured as indicated above for side transverses, etc., except that in no case is it to be less than 15% of the depth of vessel.

ℓ_b = span of the member, in m (ft), measured between the points of support as indicated in A-2/Figure 1. Where effective brackets are fitted, the length ℓ_b is to be measured as indicated in A-2/Figures 2a and 2b; nor is the length for deck and bottom transverses in wing tanks to be less than 0.125*B* or one-half the breadth of the wing tank, whichever is the greater. Where a centerline longitudinal bulkhead is also fitted, this minimum length will be specially considered.

13.5 Local Loading Conditions

In addition to withstanding the loads imposed by longitudinal hull girder shearing and bending action, the structure is to be capable of withstanding the following local loading conditions without exceeding the permissible bending and average shearing stresses stated in A-2/13.3 and A-2/13.7.

- Center tank loaded; wing tanks empty; $^1/_3$ summer load line draft
- Center tank empty; wing tanks loaded; $^1/_3$ summer load line draft
- Center and wing tanks loaded; $^1/_3$ summer load line draft

Note: For loaded tanks, the head *h* is to be measured to a point located 2.44 m (8 ft) above the deck at side, except in the case of vessels less than 122 m (400 ft) in length, as explained in A-2/13.3.

In addition, where the arrangement of the vessel involves tanks of relatively short length, or tanks designated as permanent ballast tanks, it is recommended that the following appropriate loading conditions also be investigated:

- Center tank loaded; wing tanks empty; summer load line draft
- Center tank empty; wing tank loaded; summer load line draft

In all cases, the structure is to be reviewed for other realistic loading conditions associated with the vessel's intended service.

13.7 Web Portion of Members

The net sectional area of the web portion of the member, including effective brackets where applicable, is not to be less than that obtained from the following equation:

$$A = F/q \quad \text{cm}^2 \ (\text{in}^2)$$

where

F = shearing force at the point under consideration, kN (kgf, Ltf)

q = allowable average shearing stress in the web of the supporting member, as determined from A-2/Table 1.

For longitudinal supporting members, the value of q is to be 80% of the value shown in A-2/Table 1.

Where individual panels exceed the limits given in A-2/Table 1, detailed calculations are to be submitted in support of adequate strength against buckling.

The thickness of the web portions of the members is not to be less than given in A-2/Table 2 for minimum thickness. Reduced thickness may be considered for higher strength materials if the buckling and fatigue strength is proven adequate.

It is recommended that compliance with the foregoing requirement be accomplished through a detailed investigation of the magnitude and distribution of the imposed shearing forces by means of an acceptable method of engineering analysis. Where this is not practicable, the following equations may be used as guides in approximating the shearing forces.

$F = csD(K\ell_s - h_e)$ for bottom transverses

$F = cs\left[K_L \ell_s h - h_e\left(h + \frac{\ell_s}{2} - \frac{h_e}{2}\right)\right]$ for lower side transverses or vertical transverses on longitudinal bulkheads

$F = cs\left[K_U \ell_s h - h_e\left(h + \frac{\ell_s}{2} - \frac{h_e}{2}\right)\right]$ for upper side transverses or vertical transverses on longitudinal bulkheads

where

c = 10.05 (1025, 0.0285)

s = spacing of transverses, in m (ft)

D = depth of vessel, as defined in 3-1-1/7 of the *Steel Vessel Rules*, in m (ft)

B = breadth of vessel as defined in 3-1-1/5 of the *Steel Vessel Rules*, in m (ft)

ℓ_s = span of transverse, in m (ft), as indicated in A-2/Figure 3

h_e = effective length or height of bracket, in m (ft), as indicated in A-2/Figure 3. In no case is h_e to be greater than $0.33\ell_s$

h = vertical distance, in m (ft), as defined in A-2/13.3, for the particular member in question.

K = bottom members, K is as shown in A-2/Figure 3 for the point under consideration

K_L = lower side transverses or vertical transverses on longitudinal bulkheads

= 0.65 without struts

= 0.55 with one strut

= 0.43 with two struts

= 0.38 with three or more struts

K_U = upper side transverses or vertical transverses on longitudinal bulkheads

= 0.35 without struts

= 0.25 with one strut

= 0.20 with two struts

= 0.17 with three or more struts

Where a centerline longitudinal bulkhead is fitted, the tabulated values of K_L and K_U will be specially considered.

The net sectional area of the lower side transverse, as required by the foregoing paragraphs, should be extended up to the lowest strut, or to $0.33\ell_s$, whichever point is the higher. The required sectional area of the upper side transverse may be extended over the upper $0.33\ell_s$ of the member.

13.9 Proportions

Webs, girders and transverses are to be not less in depth than required by the following, where the required depth of member is expressed as a percentage of the span.

- 12.5% for side and deck transverses, for webs and horizontal girders of longitudinal bulkheads, and for stringers.
- 20% for deck and bottom centerline girders, bottom transverses, and webs and horizontal girders of transverse bulkheads.

The depth of side transverses and vertical webs is to be measured at the middle of ℓ_b, as defined in A-2/13.3, and the depth may be tapered from bottom to top by an amount not exceeding 8 mm per 100 mm (1 in. per ft). In no case are the depths of members to be less than three (3) times the depth of the slots for longitudinals. The thickness of webs is to be not less than required by A-2/13.7, nor is it to be less than the minimum thickness given in A-2/Table 2.

13.11 Brackets

Brackets are generally to be of the same thickness as the member supported, are to be flanged at their edges and are to be suitably stiffened.

13.13 Stiffeners and Tripping Brackets

13.13.1 Web Stiffeners

Stiffeners are to be fitted for the full depth of the deep supporting member at the following intervals, unless specially approved based on the structural stability of deep supporting members:

Location	*Interval*	
	$L \le 198$ m (650 ft)	$L > 198$ m (650 ft)
Bottom	every longitudinal	every longitudinal
Side	every second longitudinal	every longitudinal
Bulkhead	every second stiffener	every stiffener
Deck	every third longitudinal	every third longitudinal

Special attention is to be given to the stiffening of web plate panels close to change in contour of web or where higher strength steel is used.

The moment of inertia, I, of the above stiffener, with the effective width of plating not exceeding s or 0.33ℓ, whichever is less, is not to be less than the following equations:

$$I = 0.19\ell t^3 (\ell/s)^3 \quad \text{cm}^4\ (\text{in}^4) \quad \text{for } \ell/s \le 2.0$$

$$I = 0.38\ell t^3 (\ell/s)^2 \quad \text{cm}^4\ (\text{in}^4) \quad \text{for } \ell/s > 2.0$$

where

ℓ = length of stiffener between effective supports, in cm (in.)

t = required thickness of web plating, in cm (in.), but need not be greater than $s/80$

s = spacing of stiffeners, in cm (in.)

Web stiffeners are to be attached to the deep webs, longitudinals and stiffeners by continuous fillet welds.

Where depth/thickness ratio of the web plating exceeds 200, a stiffener is to be fitted parallel to the flange at approximately one-quarter depth of the web from the face plate. Special attention is to be given to providing for compressive loads.

13.13.2 Tripping Bracket

Tripping brackets, arranged to support the flanges, are to be fitted at intervals of about 3 m (10 ft), close to change of section, and in line with or as near as practicable to the flanges of struts.

13.15 Slots and Lightening Holes

Slots and lightening holes, where cut in webs, are to be kept well clear of other openings. The slots are to be neatly cut and well rounded. Lightening holes are to be located midway between the slots and at about one-third of the depth of the web from the shell, deck or bulkhead. Their diameters are not to exceed one-fourth the depth of the web. In general, lightening holes are not to be cut in those areas of webs, girders and transverses where the shear stresses are high. Similarly, slots for longitudinals are to be provided with filler plates or other reinforcement in these same areas. Where openings are required in high shear stress areas, they are to be effectively compensated. Continuous fillet welds are to be provided at the connection of the filler plates to the web and of the filler plate to the longitudinals.

13.17 Struts *(1994)*

Where one or more struts are fitted as an effective supporting system for the wing-tank members, they are to be spaced so as to divide the supported members into spans of approximately equal length. The value of W for struts is obtained from the following equation:

$W = nbhs$ kN (tf, Ltf)

where

n = 10.5 (1.07, 0.03)

b = mean breadth, in m (ft), of the area supported

h = vertical distance, in m (ft), from the center of the area supported to a point located 1.22 m (4 ft) above the deck at side amidships in vessels 61 m (200 ft) in length and to a point located 2.44 m (8 ft) above the deck at side amidships in vessels 122 m (400 ft) in length and above; for intermediate lengths, intermediate points may be used. The value of h is not to be less than the vertical distance, in m (ft), from the center of the area supported to the tops of the hatches.

The permissible load of struts, W_a, is to be determined by the following equation and is to be equal to or greater than the calculated W as determined above.

$W_a = (k - n\ell/r)A$ kN (tf, Ltf)

where

k = 12.09 (1.232, 7.83) ordinary strength steel

= 16.11 (1.643, 10.43) HT32

= 18.12 (1.848, 11.73) HT36

ℓ = unsupported span of the strut, in cm (ft)

r = least radius of gyration, in cm (in.)

A = cross sectional area of the strut, in cm (in.)

n = 0.0444 (0.00452, 0.345) ordinary strength steel

= 0.0747 (0.00762, 0.581) HT32

= 0.0900 (0.00918, 0.699) HT36

Special attention is to be paid to the end connections for tension members, as well as to the stiffening arrangements at their ends, to provide effective means for transmission of the compressive forces into the webs. In addition, horizontal stiffeners are to be located in line with and attached to the first longitudinal above and below the ends of the struts.

15 Frames, Beams and Bulkhead Stiffeners

15.1 Arrangement

The sizes of the longitudinals or stiffeners as given in this Paragraph are based on the transverses or webs being regularly spaced. Longitudinals or horizontal stiffeners are to be continuous or attached at their ends to effectively develop their sectional area. This requirement may be modified in the case of stiffeners on transverse bulkheads. Longitudinals and stiffeners are to be attached to the transverses or webs to effectively transmit the loads onto these members. Consideration is to be given to the effective support of the plating in compression when selecting the size and spacing of longitudinals.

15.3 Structural Sections

15.3.1 Section Modulus

Each structural section for longitudinal frames, beams or bulkhead stiffeners, in association with the plating to which it is attached, is to have a section modulus *SM* not less than obtained from the following equation:

$SM = 7.8chs\ell^2$ cm^3 $\qquad$ $SM = 0.0041chs\ell^2$ in^3

where

c = 1.40 for bottom longitudinals

= 0.95 for side longitudinals

= 1.25 for deck longitudinals

= 1.00 for vertical frames

= 1.00 for horizontal or vertical stiffeners on transverse bulkheads and vertical stiffeners on longitudinal bulkheads

= 0.90 for horizontal stiffeners on longitudinal bulkheads.

h = distance, in m (ft), from the longitudinals, or from the middle of ℓ for vertical stiffeners, to a point located 1.22 m (4 ft) above the deck at side amidships in vessels of 61 m (200 ft) length, and to a point located 2.44 m (8 ft) above the deck at side amidships in vessels of 122 m (400 ft) length and above; at intermediate lengths, h is to be measured to intermediate heights above the side of the vessel. The value of h for bulkhead stiffeners and deck longitudinals is not to be less than the distance, in m (ft), from the longitudinal, or stiffener to the top of the hatch.

s = spacing of longitudinals or stiffeners, in m (ft)

ℓ = length between supporting points, in m (ft)

The section modulus *SM* of the bottom longitudinals may be obtained from the above equation multiplied by R_1 where,

15.3.1(a) The bottom hull girder section modulus, SM_A, is greater than required by 3-2-1/3.7.1 of the *Steel Vessel Rules*, at least throughout 0.4*L* amidships,

15.3.1(b) Still-water bending moment calculations are submitted, and

15.3.1(c) Adequate buckling strength is maintained.

The bottom longitudinals with this modified section modulus are to meet all other Rule requirements.

$R_1 = n/[n + f_p(1 - SM_R/SM_A)]$ but is not to be taken less than 0.69

where

n = 7.69 (0.784, 4.978)

f_p = nominal permissible bending stress, as given in 3-2-1/3.7.1 of the *Steel Vessel Rules*

SM_R = hull girder section modulus required by 3-2-1/3.7.1 of the *Steel Vessel Rules*, in cm^2-m (in^2-ft)

SM_A = bottom hull girder section modulus, cm^2-m (in^2-ft), with the longitudinals modified as permitted above.

Where the heavy weather ballast draft forward is less than 0.04L, the flat of bottom forward longitudinals are not to be less than required by 3-2-4/13.5 of the *Steel Vessel Rules*.

15.3.2 Web Thickness

In addition to the requirements in 3-1-2/13.5.2 of the *Steel Vessel Rules*, the thickness of web portion is to be not less than the thickness given in A-2/Table 2, reduced by 1.0 mm (0.04 in.).

15.5 Bilge Longitudinals

Longitudinals around the bilge are to be graded in size from that required for the lowest side longitudinals to that required for the bottom longitudinals.

15.7 Vessels under 76 m (250 ft)

In vessels under 76 m (250 ft) in length, the coefficient c for use in the above equation for bottom longitudinals may be reduced to 1.30.

17 Structure at Ends

Beyond the cargo spaces, the scantlings of the structure may be as required in way of the cargo spaces, in association with the values of h in the various equations measured to the upper deck, except that in way of deep tanks, h is to be not less than the distance, in m (ft), measured to the top of the overflow. In way of dry spaces, the deck beams and longitudinals are to be as required in Section 3-2-7 of the *Steel Vessel Rules*. The value of h for deck transverses in way of dry spaces is to be obtained from Section 3-2-7 of the *Steel Vessel Rules* and the section modulus SM is to be obtained from the following equation:

$SM = 4.74chs\ell^2$ cm^3 $SM = 0.0025chs\ell^2$ in^3

where

c = 1.23

s = spacing of transverses, in m (ft)

ℓ = span, in m (ft)

The transition from longitudinal framing to transverse framing is to be effected in as gradual a manner as possible, and it is recommended that a system of closely spaced transverse floors be adopted in way of the main machinery.

FIGURE 1
Coefficients and Lengths for Transverses

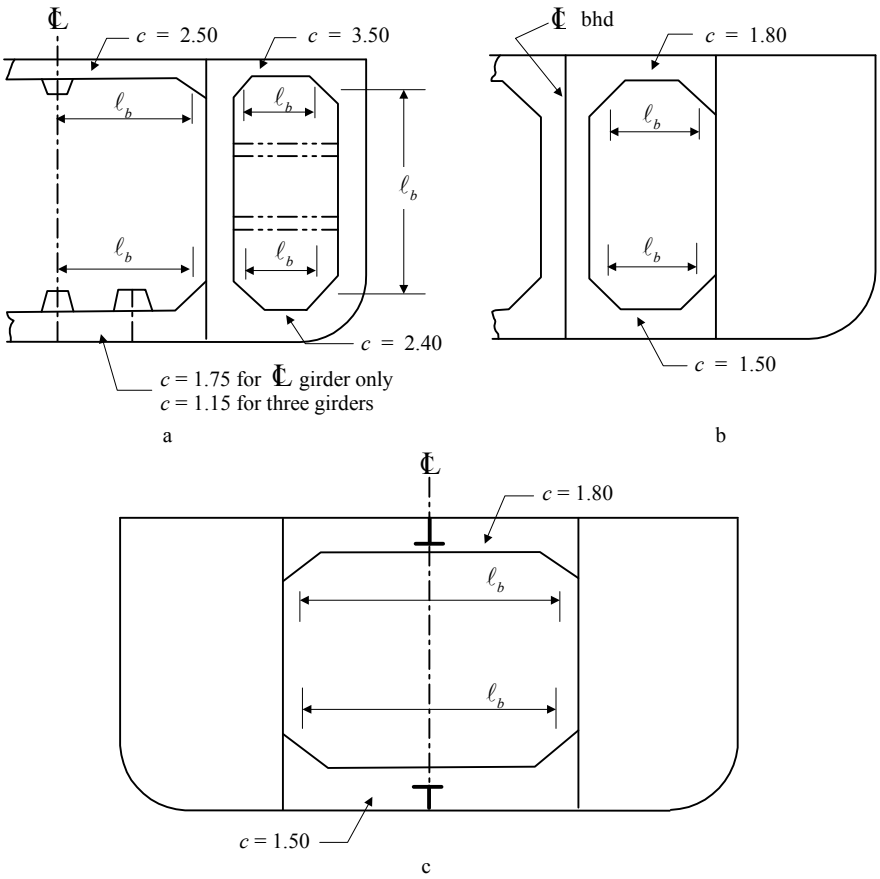

FIGURE 2
Lengths with Brackets

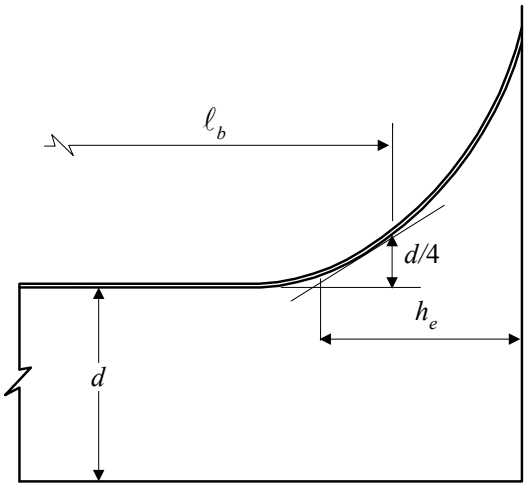

Where face plate area on the member is carried along the face of the bracket

a

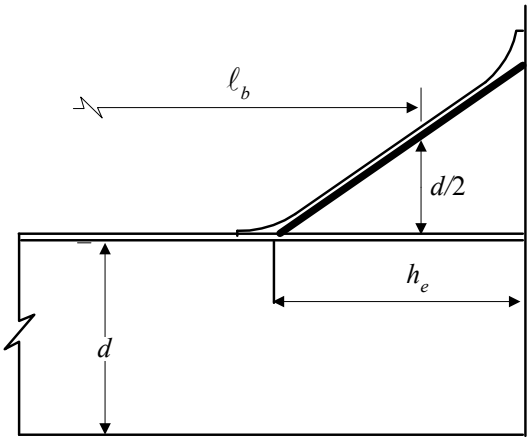

Where face plate area on the member is not carried along the face of the bracket, and where face plate area on the bracket is at least one-half the face plate area on the member

b

FIGURE 3
Spans of Members and Effective Lengths or Heights of Brackets

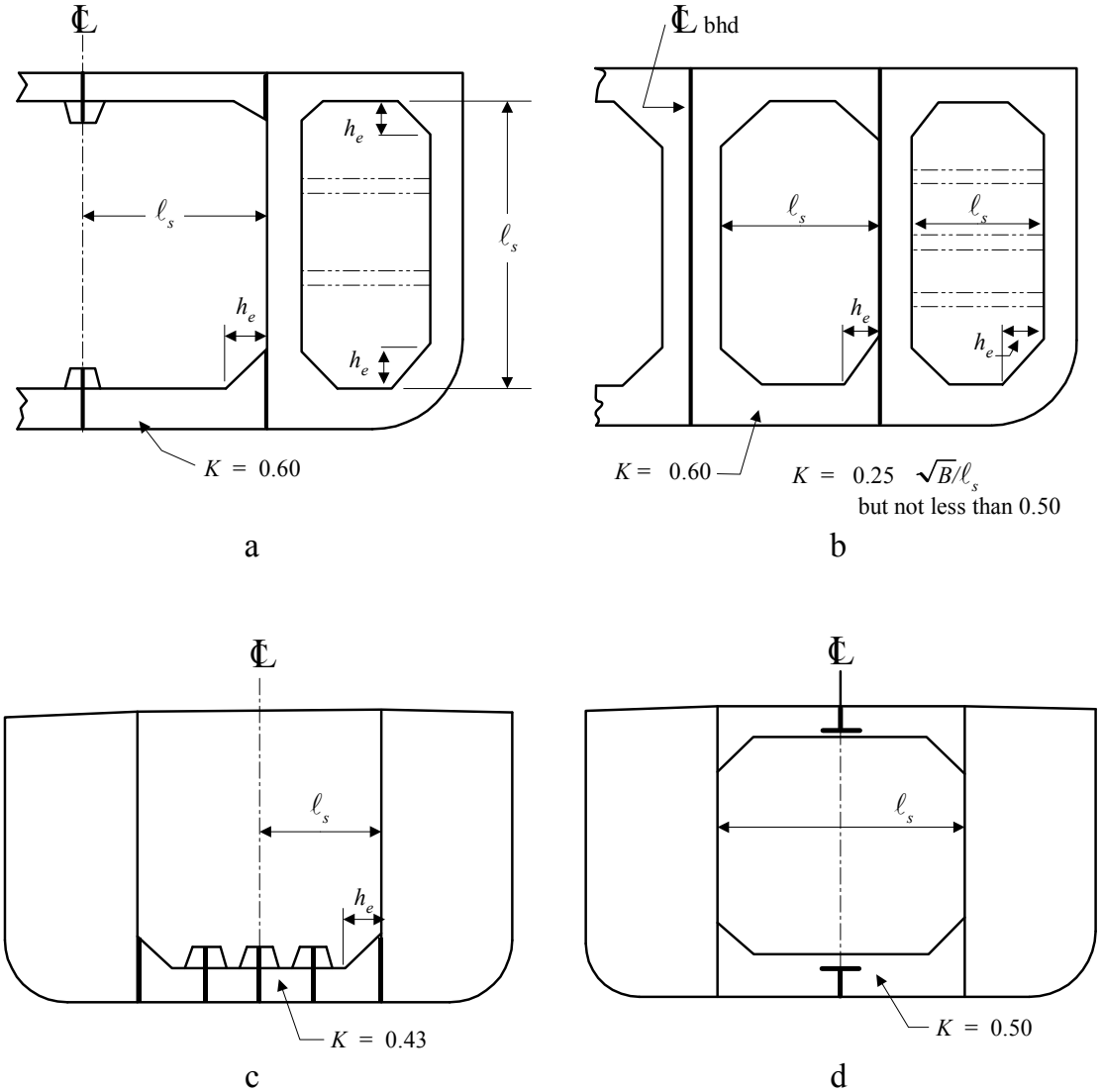

TABLE 1
Values of q for Ordinary Strength Steel

s = spacing of stiffeners or depth of web plate, whichever is the lesser, in cm (in.)

t = thickness of web plate, in cm (in.)

s/t	*kN/cm²*	*kgf/cm²*	*Ltf/in²*
80 and less	8.5	870	5.5
160 maximum	5.4	550	3.5

TABLE 2
Minimum Thickness for Web Portions of Members

L is the length of the vessel, in m (ft), as defined in 3-1-1/3 of the *Steel Vessel Rules*. For vessels of lengths intermediate to those shown in the table, the thickness is to be obtained by interpolation.

L meters	*t* mm		*L* feet	*t* in.
61	8.5		200	0.34
82	9		270	0.36
118	10		390	0.40
154	11		510	0.44
190	12		630	0.48
210 and over	12.5		700 and over	0.50

This Page Intentionally Left Blank

ANNEX

APPENDIX 1 Guide for Hull Girder Shear Strength for Tankers

1 Introduction

This Guide is a supplement to 3-2-1/3.5 of the *Steel Vessel Rules* and is intended to provide a simplified method for determining the allowable still-water shearing forces, in accordance with the Rule requirements, for tankers having two or three longitudinal watertight bulkheads, where the wing bulkheads are located no closer than 20% of the breadth from the side shell.

The computational method presented in this Guide is deduced from shear flow and three-dimensional finite element calculation results and is applicable to tankers having single bottom construction with deep bottom transverses and swash transverse bulkheads. For tankers having either double bottom, double skin or deep bottom girders, the allowable still-water shearing force will be subject to special consideration.

With the present Rule side shell thickness, local load effects are not considered for the side shell, as the longitudinal bulkhead generally governs the permissible shear force at any particular location.

3 Allowable Still-water Shearing Force

The allowable still-water shearing force, in kN (tf, Ltf), at any transverse section of the vessel is the lesser of the *SWSF* obtained from A-A1/3.1 and A-A1/3.3 with any applicable modification as specified in A-A1/3.5.

3.1 Considering the Side Shell Plating

$$SWSF = \frac{0.935 f_s t_s D_s}{N_s} - F_w$$

3.3 Considering Various Longitudinal Bulkhead Plating

$$SWSF = \frac{1.05 f_s t_b D_b}{K_1 N_b} - F_w$$

In general, in the absence of a local load, two locations need be checked for each bulkhead: the lower edge of the thinnest strake and at the neutral axis of the section. When a local load is present, the *SWSF* should be computed at the base of each longitudinal bulkhead strake for use with A-A1/3.5. For vessels having three longitudinal bulkheads, the *SWSF* should be calculated considering both the centerline and wing bulkheads.

F_w = wave induced shear force, as specified by 3-2-1/3.5.2 of the *Steel Vessel Rules*, in kN (tf, Ltf)

f_s = permissible total shear stress, as specified in 3-2-1/3.9.1 of the *Steel Vessel Rules*, in kN/cm^2 (tf/cm^2, Ltf/in^2)

t_s = thickness of the side shell plating at the neutral axis of the section in, cm (in.)

t_b = thickness of the centerline or wing longitudinal bulkhead plating at the location under consideration, in cm (in.)

D_s = depth of the hull girder at the section under consideration, in cm (in.)

D_b = depth of the longitudinal bulkhead at the section under consideration, in cm (in.)

N_s, N_b = shear distribution factors for side shell and longitudinal bulkheads, respectively, and may be determined by A-A1/5.

K_1 = $1 + y/(8\,\bar{y})$

y = distance measured from the deck or bottom (depending on whether the strake considered is above or below the neutral axis of the section) to the lower edge of the bulkhead strake under consideration, in cm (in.)

$\bar{y}$ = distance measured from the deck (bottom) to the neutral axis of the section, when the strake under consideration is above (below) the neutral axis, in cm (in.)

3.5 Reduction for Local Loads

When the loading head in the center tank is different from that in an adjacent wing tank, then the allowable *SWSF* computed at the various bulkhead locations in A-A1/3.3 may have to be reduced, as follows.

3.5.1

For the case of a two longitudinal bulkhead vessel, when the center tank head is less than that in any adjacent wing tank, no reduction need be made.

3.5.2

For two and three bulkhead vessels, when the center tank head exceeds that in a wing tank, within the center tank region, a hull girder shear force reduction, R, should be computed at the corresponding locations on the bulkheads used in A-A1/3.3. These reductions should be determined for both wing and centerline bulkheads, and may be calculated as follows.

$$R = W_c \left(\frac{2.1 K_2 N_w}{3 K_1 N_b} - 1 \right) \text{ kN (tf, Ltf)}$$

If $2.1K_2N_w$ is less than or equal to $3K_1N_b$, R should be taken as zero.

K_1, N_b = as previously defined

N_w = distribution factor for local loads, as specified in A-A1/5

K_2 = $1 + (A/A_b)$

A = total area of the longitudinal bulkhead plating above the lower edge of the strake under consideration, in cm^2 (in^2)

A_b = total area of the longitudinal bulkhead plating under consideration, in cm^2 (in^2)

W_c = effective local load which may be denoted by W_{c1} and W_{c2}, at the fore and aft ends of the center tank, respectively

$$W_{c1} = \frac{wb_c}{\ell_c}\left[h_{c1}\ell_1\left(\ell_2 + \frac{\ell_1}{2}\right) + h_{c2}\frac{\ell_2^2}{2}\right]$$

$$W_{c2} = \frac{wb_c}{\ell_c}\left[h_{c1}\frac{\ell_1^2}{2} + h_{c2}\ell_2\left(\ell_1 + \frac{\ell_2}{2}\right)\right]$$

w = density of the cargo (ballast), in kgf/m^3 (tf/m^3, Ltf/ft^3)

ℓ_c, b_c = length and breadth, respectively, of the center tank, in m (ft)

h_{c1}, h_{c2} = excess fluid heads in the center tank. Should the head in a wing tank exceed that in the center tank, see A-A1/3.5.3 below.

ℓ_1, ℓ_2 = longitudinal distances from the respective center tank ends to the succeeding wing tank transverse bulkheads

3.5.3

When the head in wing tanks exceeds that in the center tank, within the center tank region, h_c should be taken as zero for two longitudinal bulkhead vessels. However, a reduction should be applied only to the *SWSF* computed while considering the centerline bulkhead in A-A1/3.3. This reduction may be computed by the equations in A-A1/3.5.2, except that b_c is to be taken as the combined breadth of both wing tanks ($b_c = 2b_w$), and h_c is the excess head in the wing tank above that in the center tank.

5 Distribution Factors

The distribution factors N_s, N_b and N_w may be determined by the following equations.

5.1 For Vessels Having Two Longitudinal Bulkheads

$$N_b = 0.32 - 0.06(A_s/A_b)$$

$$N_s = 0.5 - N_b$$

$$N_w = 0.31(n - 1)/n$$

where

A_s = total projected area of the side shell plating, in cm^2 (in$^{2)}$

A_b = as previously defined

n = total number of transverse frame spaces in the center tank

5.3 For Vessels Having Three Longitudinal Bulkheads

$$N_{b\ (\text{center})} = 0.26 - 0.044(A_s/A_b) + C_1$$

$$N_{b\ (\text{wing})} = 0.25 - 0.044(A_s/A_b) - C_2$$

$$N_s = 0.5 - 0.5N_{b\ (\text{center})} - N_{b\ (\text{wing})}$$

$N_{w\ (\text{center})} = (0.7N_b + 0.15)(n - 1)/n$

$N_{w\ (\text{wing})} = (1.5N_b - 0.1)(n - 1)/n$

A_s, A_b, n are as previously defined, however, A_b should be either the center or wing bulkhead area, depending on which is being considered.

$C_1 = 0$ for $K > 0.9$

$C_1 = 0.1\ (1 - K) - 0.005$ for $K \leq 0.9$

$K = A_{b\ (\text{wing})}/A_{b\ (\text{center})}$

$C_2 = 0$ for $K > 0.9$

$C_2 = 0.04\ (1 - K)$ for $K \leq 0.9$
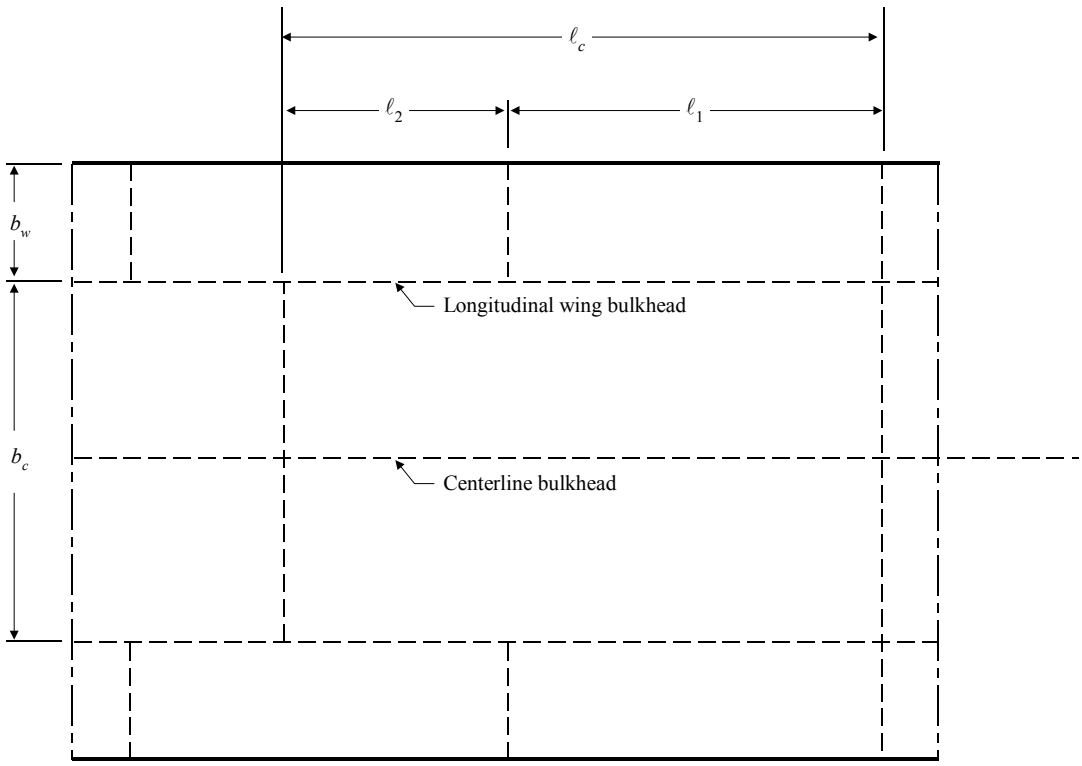
FIGURE 1
Center Tank Region